Public Notice
Purchasing Equipments for Operational Activities (Access Ladder for Turbine Turning Gear)

1. Scope of Supply

Purchasing Equipments for Operational Activities (Access Ladder for Turbine Turning Gear)

2. Bidding Type

- Domestic open bidding to select the lowest priced suppliers and evaluated by total price
- This bidding is conducted under one stage two cover bidding procedure (1 envelope for unprice document, administration requirements and technical requirements and 1 envelope of price document for the vendor who can pass the qualification).

3. Requirement for Qualification of Bidder

It is mentioned in document of INVITATION TO BID, Bidding Schedule of Purchasing Equipments for Operational Activities (Access Ladder for Turbine Turning Gear), Section 1.2.1.

4. Bid Closing date and Time on 11.00 WIB, **November 17, 2026**.

5. Invitation to Bid (ITB) and Additional Information

- Invitation to Bid (ITB) document copy or soft file is available in website PT. KPJB (www.kpjb.co.id); or
- Email : procurement34@kpjb.co.id or ulfa.lutfiana@kpjb.co.id

6. Bid submission

To : Ulfa Nikmatul Lutfiana
Finance & Administration Division (KPJB-NR-2026-0211)
PT. Komipo Pembangkitan Jawa Bali (KPJB)
PLTU Tanjung Jati B Unit 3 & 4,
Desa Tubanan, Kecamatan Kembang,
Kabupaten Jepara, Jawa Tengah, Indonesia 59475
Tel : 0291-4270493, Fax : 0291-4270601

7. Procedure for Submission Bid Document

- The bidding document shall be submitted in a sealed envelope by registered mail or direct submission after KPJB security's check not later than the bid closing date and time.
- Document title shall be marked in the envelope as **"**Purchasing Equipments for Operational Activities (Access Ladder for Turbine Turning Gear)"

PLTU Tanjung Jati B Unit 3 & 4
Desa Tubanan Kecamatan Kembang
Kabupaten Jepara Jawa Tengah
Indonesia 59475
Tel: 0291-427-0491 Fax: 0291-427-0601

Bidding Schedule of Purchasing Equipments for Operational Activities (Access Ladder for Turbine Turning Gear)

Target dates	Description
November 10, 2026	✓ Approval for Procurement Plan including ITB
November 10, 2026	✓ Public Notice for Bidding through KPJB website (www.kpjb.co.id)
November 17, 2026 (11.00 WIB)	✓ Bid document submission closing ✓ Receive bidding document and open bidding document
November 18, 2026	✓ Negotiation with the 1st Negotiable Bidder ✓ Report the result of negotiation and issue purchase order

INVITATION TO BID

Purchasing Equipments for Operational Activities (Access Ladder for Turbine Turning Gear)

(ITB No: KPJB-NR-2026-0211)

November 3, 2026

PT. Komipo Pembangkitan Jawa Bali

PLTU Tanjung Jati B Unit 3 & 4
Desa Tubanan Kecamatan Kembang
Kabupaten Jepara Jawa Tengah
Indonesia 59475
Tel: 0291-427-0491 Fax: 0291-427-0601

CONTENTS

CHAPTER I....3
BID NOTICE....3
1. General Notice....3
1.1 General 3
1.1.1 Introduction 3
1.1.2 Compliance with the ITB 3
1.1.3 Definition of Terms 3
1.1.4 Languages 3
1.1.5 Address 4
1.1.6 Nullification of Bid 4
1.1.7 Cost of Bidding 4
1.1.8 Confidentiality of Information 4
1.1.9 Title to Bid 5
1.1.10 Notice of ITB Amendment 5
1.1.11 Computation of Time 5
1.1.12 Withdrawal of Bidding 5
1.1.13 Restriction on Bidding Participation Eligibility for Unfair Supplier 5
1.1.14 Miscellaneous 5
1.2 Bidding Procedure 6
1.2.1 Qualification of Bidder 6
1.2.2 Application for Participation in Bidding 7
1.2.3 Submission of Bid 8
1.2.4 Opening of Bid 8
1.2.5 Bidding under the Renotification 8
1.3 Preparation of Bid 8
1.3.1 Contents of Bid Documents 8
1.3.2 Packaging Bid Documents 9
1.3.3 Quantity of Bid Documents 9
1.3.4 Modification of Bid 9
1.3.5 Additional Documents 9
1.3.6 Exceptions to ITB 10
1.3.7 Alternative 10
1.3.8 Validity of Bid 10
1.3.9 Contradiction of ITB or Bid 11
1.3.10 Reference Data 11

PLTU Tanjung Jati B Unit 3 & 4
Desa Tubanan Kecamatan Kembang
Kabupaten Jepara Jawa Tengah
Indonesia 59475
Tel: 0291-427-0491 Fax: 0291-427-0601

1.3.11 Signature or Affixing a Seal 11
1.4 Bid Evaluation and Contract Award 11
1.4.1 Criteria and Procedure of Bid Evaluation 11
1.4.2 Principle of not opening the contents of Bid Evaluation 11
1.4.3 Clarification of Bid 11
1.4.4 Decision on the first negotiable Bidder 12
1.4.5 Contract Negotiations and the Award of the Contract 12
2. Special Notices 13
2.1 Scope of Supply 13
2.2 Delivery Schedule 13
2.3 Closing Date and Time for Receiving Bid document 13
2.4 Bidding Type 13
2.5 Requirements for Bid Price 13
2.5.1 Bid Currencies 13
2.5.2 Pricing Basis 13
2.5.3 Delivery Terms 13
2.5.4 Tax, Duties and Tariffs 14
2.5.5 Other Terms 14
2.6 Procedure and Criteria for Bid Evaluation 14
2.6.1 Procedure for Bid Evaluation 14
2.6.2 Criteria for Bid Evaluation 15
2.7 Notice prior to Award 16
CHAPTER II..... 17
TERMS AND CONDITIONS 17
1. General Terms and Conditions..... 17
CHAPTER III 23
MATERIAL LIST..... 23
CHAPTER IV..... 24
FORMS 24
4.1 Bid Form..... 24
4.1.1 Priced Documents 24
4.2.2 Un-Priced Quotation..... 26
4.2 KPJB Contractor Safety Rules.....27
4.3 Picture..... 31
.

PLTU Tanjung Jati B Unit 3 & 4
Desa Tubanan Kecamatan Kembang
Kabupaten Jepara Jawa Tengah
Indonesia 59475
Tel: 0291-427-0491 Fax: 0291-427-0601

CHAPTER I
BID NOTICE

1. General Notice

1.1 General

1.1.1 Introduction

The Komipo Pembangkitan Jawa Bali (hereinafter referred to as "KPJB") duly organized by virtue of the law of the Republic of Indonesia and having its head office in Jepara, Indonesia intends to Purchasing Equipments for Operational Activities (Access Ladder for Turbine Turning Gear). In this regard, KPJB issues this Invitation To Bid (hereinafter referred to as "ITB") to provide the bidder who may participate in this bidding procedure with further information, such as the procedures and requirements for bidding, contractual terms and conditions, the scope of supply, delivery schedule, and technical specifications.

1.1.2 Compliance with the ITB

The bidder shall prepare and submit the bid in strict compliance with the procedures and requirements as provided in this ITB. Any failure to do so may be sufficient reason for KPJB to reject or to unfavorably evaluate the bid. The bidder shall be regarded as having been sufficiently acquainted with and having accepted all the contents of the ITB, unless otherwise stated in the bid.

1.1.3 Definition of Terms

The definition as provided in Article 1 of General Terms and Conditions for the Contract of Chapter II shall be applied to the terms employed in other Chapters, except where the context otherwise specifies.

1.1.4 Languages

The ITB is provided in English language and/or Bahasa Indonesia. The bid document, technical specifications and related documents shall be written in English and/or Bahasa Indonesia. Bid documents which are written in other languages will not be accepted by KPJB.

1.1.5 Address

The address of KPJB to which the bid should be sent is as follows:

To: Ulfa Nikmatul Lutfiana (PIC RFQ No. KPJB-NR-2026-0211)

Finance & Administration Division PT. KPJB

PLTU Tanjung Jati B Unit 3 & 4

Desa Tubanan, Kecamatan Kembang, Kabupaten Jepara

Jawa Tengah, Indonesia 59475

1.1.6 Nullification of Bid

The following bids shall become nullified:

a. Bid which is submitted by a person not qualified for participation in this bidding;
b. Bid which deviates from Article 1.2.2, Application for Participation in bidding;
c. Bid which deviates from Article 1.2.3, Security Deposit for Bidding;
d. Bid which is made by a person who does not submit a power of attorney by the time of bidding, or is not authorized;
e. Bid which deviates from Article 1.3.11, Signature or Affixing a Seal;
f. Bid which is submitted after the closing time for receiving bidders;
g. Two or more bidders for the same item which are submitted by the same bidder for this bidding (except for alternatives, where permitted);
h. Bid which does not contain the information and data required by this ITB;
i. Bid which deviates from other essential requirements of the ITB as deemed by KPJB;

1.1.7 Cost of Bidding

The bidder shall bear his/her costs and expenses incurred in connection with participating in this bidding procedure processing of qualification procedure, bid evaluation and contract negotiation, and in no case shall KPJB be liable for such costs and expenses.

1.1.8 Confidentiality of Information

The bidder shall not disclose its bid to any third party who is not directly related with the preparation of the bid. KPJB will also keep the bid confidential unless required by the Government Procurement Agreement, by Indonesian laws and/or by the provisions of the ITB.

1.1.9 Title to Bid

The bid document or other documents submitted to KPJB shall be the property of KPJB and shall not be returned to the bidder regardless of whether it is accepted or rejected by KPJB.

1.1.10 Notice of ITB Amendment

KPJB may amend or change the ITB, and, in such case, KPJB shall notify the bidders of the amendment or changes in writing. The amendment or changes will constitute a part of the ITB.

1.1.11 Computation of Time

Unless otherwise provided in the ITB, a period that is stated in the number of days or months will include Saturday and holidays, and in case the last date of the period or any specific day falls on a holiday, the day will be postponed to the closest following business day.

The date and time specified in the ITB is in line with the Western Indonesia Standard Time.

1.1.12 Withdrawal of Bidding

KPJB has the right to withdraw or postpone this bidding procedure, to invite to re-bidding, or to alter the scope of supply, the delivery schedule and others, at any time and without any liability to the bidder, if it is required due to changes in the concerned project, excess of the bid prices over KPJB's target price, failure in contract negotiations or other reasonable causes.

No claims for compensation with regard to the withdrawal, postponement, rebidding and/or alteration stated above will be accepted by KPJB.

1.1.13 Restriction on Bidding Participation Eligibility for Unfair Supplier

KPJB will restrict a supplier who might be detrimental to a fair execution of competition or a proper fulfillment of the contract, or who is deemed improper to participate in the bidding from participating in any bid invited by KPJB for the period of not less than one (1) month but not more than two (2) years.

1.1.14 Miscellaneous

The other matters regarding the qualification for participation in bidding and the matters not specified in this ITB shall be determined by KPJB.

PLTU Tanjung Jati B Unit 3 & 4
Desa Tubanan Kecamatan Kembang
Kabupaten Jepara Jawa Tengah
Indonesia 59475
Tel: 0291-427-0491 Fax: 0291-427-0601

1.2 Bidding Procedure

1.2.1 Qualification of Bidder

1. Applicants which can participate in this bidding shall meet all of the following requirements :

a. Professional, competent, resourceful and experienced Agency/Company/Distributor which is able to provide/supply of Purchasing Equipments for Operational Activities (Access Ladder for Turbine Turning Gear) (Detail list of materials are specified in Chapter III).

b. Domestic Professional company which participates in this bidding shall submit a copy of contract/purchase order confirming that the company has an experience in supplying of materials and submit the consumables and/or list to be provided by this bidding with the evidence document.

c. Any business entity on the KPJB Black List is not allowed to participate in this Bidding.

2. **Submission Documents (Unpriced Required Documents Envelope and Original Price Quotation Envelope**

No.	Syarat Administrasi (Administration Requirement)
A.	
1	Asli Surat Penawaran (Original Unprice quotation) yang:
	1. Description sesuai permintaan
	2. Bertanggal (dated)
	3. Bertanda tangan dan Cap Perusahaan (Company stamped)
	4. Menyebutkan waktu pengiriman sampai gudang sesuai permintaan (Time Delivery)
2	Pengalaman Pekerjaan dengan total harga kontrak senilai minimal IDR 5.000.000 – **menyerahkan copy kontrak atau PO** (Work Experience for contract amount minimum IDR 5.000.000 – **submitting the copy of the contract or PO)**
3	Copy pembayaran pajak SSP (PPN) 3 bulan terakhir periode: Juli, Agustus, September 2026 (Copy of last 3 month payment tax or period of: July, August, September 2026)
4	Vendor participant must have registered CSMS Certificate (minimum : Low Risk Level) issued by PT. PLN (Persero) - submitting the copy of the document
B.	
1	Copy Surat Ijin Usaha Perusahaan – SIUP / BKPM (PMA)

	(copy of Business License)
2	Copy Surat Ijin Tempat Usaha – SITU / DOMISILI / HO (Copy of Domicile Certrificate)
3	Copy Nomor Pokok Wajib Pajak - NPWP (Copy Tax ID number of company)
4	Copy Surat Pengukuhan Perusahaan Kena Pajak - SPPKP (Copy of Taxable Company Certificate)
5	Copy Tanda Daftar Perusahaan – TDP / NIB (Copy of Certificate Company Regristration)
6	Copy Akte pendirian perusahaan/perubahan *jika ada (Deed of Incorporation)

Note: <u>Administration Requirement point B 1-6 is not required to be submitted if your company already registered in our SAP and the Company data submitted still valid until closing time.</u> If any document not submitted by the suppliers, we will regard that the supplier fails and we will not open the price quotation document (price evaluation)

Catatan: Syarat Administrasi no. B 1-6 tidak perlu di kirimkan jika perusahaan anda sudah terdaftar di SAP kami dan data yang dahulu di kirimkan masih berlaku sampai dengan waktu penutupan bidding. Jika ada dokumen yang tidak di serahkan, kami akan menganggap bahwa supplier gagal dan kami tidak akan membuka dokumen penawaran harga (evaluasi harga).

1.2.2 Application for Participation in Bidding

Applicants for this bidding shall meet all of the following requirements:

1. Address for participating in this bidding to the address set forth in article 1.1.5.
2. Bid documents shall be prepared and submitted as stipulated in article 1.3.
3. Security Deposit for bidding as stipulated in article 1.2.3.
4. Other Documents requested by KPJB.

1.2.3 Submission of Bid

1. The bid shall be submitted in writing either by hand or by mail including courier service. The bid shall be received by KPJB on or before the closing date and time as provided in Article 2.4. No late bid will be accepted. The bid which is submitted by a method other than those noted above shall not be accepted. It shall be the bidder's responsibility to assure that KPJB has duly received the bid.

2. Quotation shall be submitted addressed to Ulfa Nikmatul Lutfiana (PIC RFQ No. KPJB-NR-2026-0211), F&A Division PT. KPJB PLTU Tanjung Jati B Unit 3&4 Tubanan, Jepara, in sealed envelopes for priced quotation and unpriced quotation separately.

1.2.4 Opening of Bid

Unless otherwise advised by KPJB, Part II, Bid for Technical and Commercial Information will be opened immediately after receipt. Part I, Price Bid will be kept sealed and not be opened until the evaluation of the Bid for Technical and Commercial Information is completed. KPJB will advise the bidder of the time and place for the opening of the Price Bid at a later time. The Bidder shall dispatch a representative or duly authorized agent to be present during the opening of the Bid.

1.2.5 Bidding under the Renotification

In the event that there is no more than one (1) qualified bids or KPJB cannot decide the successful bidder, or in the event the successful bidder does not enter into the contract, KPJB may put up for bidding under the public renotification. However, if the successful bidder refuses to enter into the Contract without any other justifiable reason, KPJB is entitled to exclude such bidder in the application for participation for re-bidding or bidding under the renotification.

1.3 Preparation of Bid

1.3.1 Contents of Bid Documents

The bid document shall be prepared respectively for using the Form of Bid as provided in Chapter IV, and the additional relevant materials which are required in the ITB or considered to be necessary for sufficient evaluation shall be attached thereto. The Form of Bid shall be complete in all respects, and, if necessary, the bidder may modify the contents of the Form with sufficient explanation.

The Bid document shall consist of the followings:

1. Part I : Priced document (Price Specifications Bid)
   a. Bid Price (Format in accordance with ITB Bid Price Form).
2. Part II : Un-Priced document (Commercial and Technical Bid)

1.3.2 Packaging Bid Documents

The bid document shall be packaged in two separate envelopes; one for Part I, Bid for Price and the other for Part II, Commercial Information and Technical

Specifications Bid, in accordance with Article 1.3.1. In particular, the Price Bid shall be sealed without fail. In addition, envelope for Part I and Part II shall be marked **"PRICED DOCUMENT"** and **"UN-PRICED DOCUMENT"** on the upper right**.** On the Upper left of each envelope shall be marked "ITB No: KPJB-NR-2026-0211, Purchasing Equipments for Operational Activities (Access Ladder for Turbine Turning Gear)"

1.3.3 Quantity of Bid Documents

The bidder shall provide the bid for each group in the following quantities:

1. Part I Bid for Price (Priced):
   - One (1) original document (Price data)
2. Part II Unpriced Required Document:
   - One (1) original document

1.3.4 Modification of Bid

The bid shall be prepared without interlineations, alterations or erasures. However, if any corrections are necessary, each corrected part shall be sealed by a company seal for the domestic bidder or signed by an authorized representative for the foreign bidder.

1.3.5 Additional Documents

In no event shall any change to the bid or additional documents be accepted by KPJB during the bid evaluation period except for the following documents:

1. Documents for the bidder's clarification which do not change the substance of the bid submitted;
2. Documents concerning the extension of validity of the bid or the Security Deposit;
3. Documents which are requested in writing by KPJB for the bid evaluation.

1.3.6 Exceptions to ITB

1. If there are deviations and exceptions from the ITB, the bidder has to submit commercial and technical terms respectively in accordance with the format of ITB Part IV. Otherwise, bidder will be regarded as having accepted all commercial and technical terms. If KPJB regards deviations and exceptions proposed by the bid as a major issue based on KPJB assessment, it can be ground for rejection of the bid.
2. If the bidder takes exception to the Technical Specifications as provided in Chapter II of the ITB, he/she shall itemize the differences with sufficient explanation to enable KPJB to evaluate the suitability of the exceptions.
3. Deviations and exceptions to Article 2.6.1 and 2.6.2 of this ITB for price bidding are not permitted.

1.3.7 Alternative

1. The bidder is encouraged to submit an alternative when he/she considers the alternative to be an improvement or more economical. The alternative shall be prepared in such a manner that it can be easily distinguished from the main bid, and that all alternative matters, including prices, shall be stated therein with sufficient explanation as to the benefits of these alternatives. The alternative shall be submitted and will be treated under the same requirements and procedure as that of the main bid.
2. KPJB will select a successful bidder according to the evaluation result of the main bid.
3. In the event that a successful bidder has proposed the alternative bid, KPJB has the right to negotiate either the main bid or alternative bid for the Contract.

1.3.8 Validity of Bid

The bid, including the Price, shall be bound as a firm offer and valid unconditionally for a period of **two (2) months** after the closing date for receiving the bid document. In case that KPJB requests the bidder to change some contents of his/her bid in connection with bid evaluation or contract negotiation, KPJB's request shall not be regarded as a rejection of the bid. KPJB, if necessary, may request the bidder to extend the validity of the bid.

1.3.9 Contradiction of ITB or Bid

In the event that any contradictory or conflicting statement or figures in the ITB or the bids are found, those which treat an issue in more specific detail and greater depth shall prevail, unless otherwise clarified by KPJB or the bidder. If the bidder has questions about the meaning or interpretation of any part of the ITB, he/she may request KPJB's clarification in writing. KPJB will not be responsible for any verbal commitment.

1.3.10 Reference Data

Any publications, data or information included for reference in the bid shall not be considered as the contents of the official bid, unless otherwise commented upon by the bidder.

1.3.11 Signature or Affixing a Seal

The bid shall be signed by a duly authorized representative or sealed by the company or business firm seal, and the power of attorney or a certificate of a seal impression shall be attached thereto.

However, the signature of the person who is to be mandated can be accepted for the foreign bidders, in case that the company or business firm seal and the power of attorney are attached to the bid.

1.4 Bid Evaluation and Contract Award

1.4.1 Criteria and Procedure of Bid Evaluation

KPJB will fairly evaluate the bid in terms of the criteria and procedure set forth in Section 2 Special Instruction of the Chapter I, and if necessary, internal regulations or procedure of KPJB.

1.4.2 Principle of not opening the contents of Bid Evaluation

The bid evaluation will be performed by KPJB and/or other entities designated by KPJB. The result of the bid evaluation made by KPJB shall be final and conclusive, and KPJB is not obliged to open to the public the matters concerning the evaluation unless required under the Government Procurement Regulation.

1.4.3 Clarification of Bid

KPJB may request the bidder to clarify the contents of the bid by letter, email or through a meeting during the bid evaluation.

1.4.4 Decision on the first negotiable Bidder

In case where the competitive bidding is effectuated by one (1) valid bidder or more, KPJB will decide as the first negotiable bidder the person whose bid meets the essential requirements of the ITB and is the most advantageous to KPJB.

1.4.5 Contract Negotiations and the Award of the Contract

1. If it is deemed necessary, KPJB shall have the right to open the contract negotiations including the contract price with the first negotiable bidder. In such a case, if the result of the negotiations is satisfactory to KPJB, the first negotiable bidder will be the successful bidder who is awarded the contract, but, if the result of the negotiations with the first negotiable bidder is not satisfactory, KPJB may proceed in the negotiations with the next placed bidder without any liabilities to the first negotiable bidder.
2. KPJB is entitled to adjust scope of supply, technical specifications, contract conditions and contract price during the negotiation period.
3. The successful bidder shall submit the required documents for entering into a contract and a list breaking down the calculations for a contract price within three (3) days after being informed of having been awarded the contract and enter into a contract by signing contract within five (5) days after being informed of having been awarded the contract. However, if the successful bidder cannot enter into a contract due to incidents of Force Majeure or cases which KPJB deems acceptable, those days where such incidents occurred shall not be calculated.
4. The bidder who is applicable under above, shall submit the Performance Bond for a contract and the required documents to KPJB not later than contract signing date.
5. If KPJB issues a written Authorization to Proceed (ATP) to Contractor with respect to all or part of the Work hereunder prior to the effective date of the contract, all provisions hereof shall apply to the Work to the extent of such ATP, and Work shall be deemed to have been performed under the contract.

PLTU Tanjung Jati B Unit 3 & 4
Desa Tubanan Kecamatan Kembang
Kabupaten Jepara Jawa Tengah
Indonesia 59475
Tel: 0291-427-0491 Fax: 0291-427-0601

2. Special Notices

2.1 Scope of Supply

The scope of supply under the contract through this bidding is provided specifically in Chapter II and III.

2.2 Delivery Schedule

Not later than **November 30, 2026**.

2.3 Closing Date and Time for Receiving Bid document

The bid document shall be submitted **not later than 11.00 WIB, November 17, 2026**

2.4 Bidding Type

1. This bidding is a domestic open bidding under the qualification for participation in bidding.
2. This bidding is conducted under **one stage two cover bidding procedure** which separates between commercial & technical evaluation and price evaluation.
3. This bidding is conducted by negotiations.

2.5 Requirements for Bid Price

The bidder shall submit the total bid price of the scope of supply according to the requirements and conditions as stipulated by the ITB and the price lists for each item and each stage as required in the attached price lists of Chapter IV.

2.5.1 Bid Currencies

The bid price shall be denoted in **Rupiah (IDR)**.

2.5.2 Pricing Basis

In consideration of a price increase or a price decrease during the contract period, the bid price shall be the fixed price based on the scope of delivery and contract conditions as specified by this ITB. Thus, any and all possible fluctuations to be incurred during the contract period shall be reflected in the bid price.

2.5.3 Delivery Terms

The bid price shall be quoted as **DDP (INCOTERMS 2020)** at PLTU Tanjung Jati B Unit 3 & 4 Site.

2.5.4 Tax, Duties and Tariffs

Bid prices shall include all the taxes, including the value-added tax (VAT), customs duties and other official charges in connection with the supply of the Goods and/or Services in the case of DDP. The VAT shall be excluded from the price of each item but included in the total bid price.

2.5.5 Other Terms

1. The bid price shall be submitted in compliance with the division of items as specified in bid format of ITB Chapter III and the bid for Commercial Terms. Any combination of an item unit is not permitted.
2. The supply of chemicals provided by subcontract of the bid shall be in compliance with Chapter II General Terms and Conditions for Contract.

2.6 Procedure and Criteria for Bid Evaluation

2.6.1 Procedure for Bid Evaluation

1. The bid evaluation will be conducted in **two (2) steps**:
   a. Unpriced Document Evaluation and;
   b. Detailed Evaluation.
2. Any of the following bidders as a result of the Preliminary Evaluation shall be excluded from the Detailed Evaluation Procedure for Bid Evaluation.
   a. Bidders as specified in Article 1.1.6 and 1.2.1 of general notice of CHAPTER I
   b. Bidders with a delivery schedule which KPJB cannot accept
   c. Bidders which cannot satisfy the major technical requirements
   d. Bidders with deviations and exceptions to the major contents of the ITB.
3. After conducting the Unpriced Document Evaluation, KPJB will inform bidders who do not pass of their failure to meet requirements of the bid.
4. Bidders who pass the Unpriced Document Evaluation shall be subject to the Evaluation.
5. The bid document which is disqualified in the Step I Evaluation shall be excluded from Step II Evaluation. KPJB may request clarifications on the contents of the bid by letter or through a meeting (if necessary). If the bidder

rejects KPJB's request for clarification, the bid document may be excluded from Step II Evaluation or be unfavorably evaluated.

6. The event that any increase/decrease to Bid Price is required during the Detailed Evaluation due to changes in the scope of supply, technical specifications, contractual terms and conditions and so on, the bidder shall submit the amount of increase/decrease within the deadline established by KPJB, using the prescribed form and enclosing it in a sealed envelope.

2.6.2 Criteria for Bid Evaluation

2.6.2.1 General Criteria

1. In the preliminary evaluation, KPJB will evaluate as to whether the bid's major deviations and exceptions, if any, are acceptable as well as whether each bid meets the essential requirements in the ITB such as technical specifications.
2. In the Detailed Evaluation, KPJB will select the most advantageous bid by economic evaluation of the bid price and the relevant costs including technical evaluation. In this regard, the evaluation factors shall be as provided in Article 2.7.2.2.

2.6.2.2 Bid Evaluation and Evaluation Factors

Major factors of bid evaluation are as follows:

1. Technical Evaluation
   - Scope of supply and Technical Differences
   - Brand and Model
   - Quality Assurance of chemicals and relevant services
   - Deviations and Exceptions to ITB's technical specifications
   - Other Required Matters
   - Delivery Schedule (how long delivery time PO is needed after PO effective date)
2. Commercial Evaluation
   - Deviations and Exceptions to General Terms & Conditions and Special Terms & Conditions
   - Other required Matters
3. Bid Price and Overall Economic Evaluation
   - Bid Price will be evaluated under Estimate Price prepared by PT. KPJB and if there are no Bidders price below estimate price, Bidding under re-notification will be applied.

- Other required Matter

2.6.2.3 Bidding under the Re-notification

In the event that there is only 1 (one) qualified bids or KPJB can not decide the successful bidder, or in the event the successful bidder does not enter into the contract, KPJB may put up for bidding under the public re-notification. However, if the successful bidder refuses to enter into the Contract without any other justifiable reason, KPJB is entitled to exclude such bidder in the application for participation for re-bidding or bidding under the re-notification.

2.7 Notice prior to Award

2.7.1 The bidder's inquiry about the ITB and clarification of his bid in regard to commercial matters and technical matters including, but not limited to, price, bid validity and contractual terms and conditions shall be made to the following addres and attention:

To: Ulfa Nikmatul Lutfiana (PIC RFQ No. KPJB-NR-2026-0211)
Finance & Administration Division PT.
KPJB PLTU Tanjung Jati B Unit 3 & 4
Desa Tubanan, Kecamatan Kembang, Kabupaten Jepara
Jawa Tengah, Indonesia 59475

PLTU Tanjung Jati B Unit 3 & 4
Desa Tubanan Kecamatan Kembang
Kabupaten Jepara Jawa Tengah
Indonesia 59475
Tel: 0291-427-0491 Fax: 0291-427-0601

CHAPTER II

TERMS AND CONDITIONS

GENERAL TERMS AND CONDITIONS FOR CONTRACT (GTC)

These General Terms and Conditions (GTC) are applicable to the Purchase Order (P/O) placed by PT. KOMIPO PEMBANGKITAN JAWA BALI (PT. KPJB) for the purchase of Equipment and/or Services as specified in the P/O, to which PT. KPJB and Supplier shall be bound.

Article 1 – Definitions

The following terms used herein shall have the meanings as set forth below:

A. "PT. KPJB" means PT. KOMIPO PEMBANGKITAN JAWA BALI Which purchases the Equipment and/or Services hereunder, and which expression shall include its legal representatives, authorized agents, successors, and assignees.
B. "Supplier" means the person, corporation, legal representatives and/or authorized agents that provide the Equipment and/or services under contract.
C. "Contract" means the contract entered into by and between the parties, which concludes the P/O placed by PT. KPJB and acknowledged by Supplier for the purchases of the Equipment and/or services.
D. "Party" means either PT. KPJB or Supplier as the case may be. "Parties" means both PT. KPJB and Supplier.
E. "Equipment and/or services" means the machinery, components, parts, devices, appliances, apparatus, tools, goods and/or related services to be provided by the Supplier under contract.
F. "Work" means all of the obligations and responsibilities to be performed by supplier hereunder, including the supply of the Equipment and/or services.
G. "Local procurement" means procurement from the supplier in Indonesia.
H. "Foreign procurement" means procurement from the supplier out of Indonesia

Article 2 – Effectiveness of the P/O

PO effective date is 2 (two) days after PT. Komipo Pembangkitan Jawa Bali approval date.

Article 3 –Contract Document and Language

3.1 The Contract documents consist of the P/O including the document attached thereto and this GTC. In case of any inconsistency between them, the P/O shall govern.

3.2 All documents and communications hereunder shall be in Bilingual (English language and Bahasa Indonesia) or English language.

PLTU Tanjung Jati B Unit 3 & 4
Desa Tubanan Kecamatan Kembang
Kabupaten Jepara Jawa Tengah
Indonesia 59475
Tel: 0291-427-0491 Fax: 0291-427-0601

Article 4 – General Provisions

4.1 The trade terms shall be subject to INCOTERMS 2000 and its amendments, unless otherwise provided in the contract.

4.2 The number of days shall be calculated based on the actual calendar days including Saturdays, Sundays and official holidays in Indonesia, and if any specific day falls on Saturday, Sunday or a holiday, the day shall be postponed to the immediately following business day.

4.3 The Equipment and/or Services to be provided hereunder shall conform to the applicable laws, regulations, codes, standards and the specifications hereof. Supplier shall provide the new and unused products suitable in all respects for the purposes intended herein and shall use the best possible design and engineering. The specifications not adequately described herein shall be in accordance with the best commercial practices.

4.4 Supplier shall be fully responsible for the work performed by its Sub-supplier.

4.5 All fittings necessary to complete the Equipment shall be provided by Supplier at no additional charge beyond the price specified in the P/O. No additional payment for ancillary items shall be made unless such items and prices thereof have been authorized by PT. KPJB in the P/O.

Article 5 – Interpretation

In the event of any disagreement between the Parties with respect to the provisions of the Contract, the interpretation of PT. KPJB shall govern, until an arbitration award is rendered in accordance with Article 15.

Article 6 – Terms of Payment

6.1 The P/O price specified in the P/O is fixed and is not subject to price fluctuations.

6.2 The P/O price shall be paid by means of bank account transfer or telegraphic transfer (T/T) or irrevocable letter of credit (L/C), as agreed to between the Parties, to Supplier against the Supplier's presentations of certificate of delivery of equipment or certificate of completion of work for local procurement, or the following transport documents for the foreign procurement:

Commercial Invoice: one (1) original and three (3) copies.

Clean on Board Ocean Vessel Bill of Lading or Air Waybill consigned to PT. KPJB : one (1) full set of original and three (3) copies

Packing List : one (1) full set of original and three (3) copies

Certificate of Manufacturer's Final Inspection : one (1) original and three (3) copies, not applicable

Certificate of Origin : one (1) original and three (3) copies, not applicable

Freight Forwarder's Certificate of receipt : one (1) original and three (3) copies, not applicable

Other documents as required by the P/O.

6.3 In case of T/T payment for foreign procurement, Supplier shall promptly send the transport documents listed above to PT. KPJB and the payment shall be made within thirty (30) days after the delivery date, unless otherwise provided herein.

6.4 In case L/C payment, Supplier shall submit the original copy of the transport documents listed above to the bank according to the L/C conditions and the copies of them shall be sent to PT. KPJB promptly. One (1) copy of the above documents shall be additionally enclosed in each package of the Equipment.
6.5 In case of Bank Account Transfer Payment for local procurement, the payment will be made by PT. KPJB within fourteen (14) days after invoice received by PT. KPJB after delivery or work completion.
6.6 Unless otherwise provided in the P/O, supplier shall bear any kind of banking charges and other expenses incurred in connection with the payment.

Article 7 – Delivery Terms and Shipment
7.1 Unless otherwise provided in the P/O, the delivery of the Equipment shall be effected hereunder in terms of Delivery to the designated place of the Power Plant site for local procurement, or FCA named place by PT. KPJB or a freight forwarder selected by PT. KPJB for the foreign procurement.
Supplier shall arrange shipment of the Equipment through PT. KPJB's freight Forwarder, if Supplier fails to do so and excess expenses are incurred to PT. KPJB thereby, he/she shall reimburse such expenses within thirty (30) days after PT. KPJB's request for payment.
7.2 Supplier shall notify PT. KPJB and the freight forwarder of delivery or shipping readiness by telefax or by any other official letter at the latest fifteen (15) days prior to readiness so that PT. KPJB may arrange the shipment and insurance coverage. Such notice shall include a port of loading, shipping items, total tonnage, cubic measurement, invoice amount and expected delivery date.
7.3 For foreign procurement, Supplier shall pack the Equipment in accordance with the best export-packing practices to prevent physical and environmental damage. Supplier shall be liable for any loss or damages caused by inadequate packing.
7.4 Any proper handling caution marks or instructions and the following information shall be durably marked on the surface of the package.
Consignee (PT. KPJB) and Consigner (supplier Name)
P/O No. and L/C No. (if applicable)
Port of Export and Destination
Item No. and Description specified in the P/O and Quantity
Net and Gross Weight and Cubic Measurement
Origin
Caution Marks such as Fragile (if applicable)
Material Safety Data Sheets (MSDS) and other related document for Hazardous material.
Other Markings as required.
7.5 Unless requested or approved by PT. KPJB, Supplier shall not deliver the Equipment early than one (1) month prior to the delivery schedule hereunder. In case of a breach thereof, PT. KPJB is entitled to delay the payment or claim interest to Supplier if already paid by L/C.

PLTU Tanjung Jati B Unit 3 & 4
Desa Tubanan Kecamatan Kembang
Kabupaten Jepara Jawa Tengah
Indonesia 59475
Tel: 0291-427-0491 Fax: 0291-427-0601

Article 8 – Liquidated Damages for Delayed Delivery

8.1 In the event that, for reasons attributable to Supplier and not excusable under Article 11, the delivery of any item of the Equipment is delayed beyond the delivery date provided in the P/O, Supplier shall pay liquidated damages to PT. KPJB, not as a penalty, in an amount of zero point one (0.1) percent of total contract amount for each day of delay unless otherwise provided in the P/O. The liquidated damages shall not exceed five (5) percent of the total P/O price.

8.2 PT. KPJB is entitled to deduct liquidated damages from any payment due supplier.

Article 9 – Performance Bond (if applicable)

9.1 Unless exempted by the P/O or approved by PT. KPJB, within twenty (20) days after the effective date of the P/O, Supplier shall establish a performance bond in favor of PT. KPJB in a form of a bank guarantee, certified check or irrevocable clean credit in an amount not less than ten (10) percent of the P/O price. The bond shall be valid until one (1) month after the expiry date of the warranty period or any extension thereof as provided in Article 10.

9.2 The bond shall be an absolute and unconditional guarantee and payable to PT. KPJB forthwith on PT. KPJB's simple demand of payment in the event that Supplier fails or refuses to promptly cure any default of its obligations hereunder.

9.3 A performance bond is not required on the following conditions

- Purchase Order amount is below IDR 500,000,000 or its equivalent currencies

Article 10 – Warranty

10.1 Supplier shall warrant that the Equipment and/or Services provided hereunder are free from defect in design, materials, workmanship, packing, title and patent. This warranty shall remain valid until twelve (12) months after the actual delivery date.

10.2 Upon receipt of PT. KPJB's notice of any defect, Supplier shall promptly correct the defect by repair, replacement, modification and/or reperfomance at its own cost including transportation charges, duties, labor costs and removal costs incurred by such correction.

10.3 In the event that PT. KPJB decides not to correct or partially correct the defect, Supplier shall refund an equitable amount to PT. KPJB through mutual agreement.

10.4 If supplier fails to correct the defect as provided herein, PT. KPJB may reject the defective Equipment and procure the similar equipment elsewhere. In such event, Supplier shall return the amount paid by PT. KPJB and be liable for any excess costs incurred by PT. KPJB for such procurement.

10.5 The warranty period for the Equipment or Services corrected shall be extended by twelve (12) months from the completion date of such correction.

10.6 The warranties provided herein are exclusive and no other warranties shall apply.

Article 11 – Liabilities

11.1 Supplier shall be liable to and indemnify PT. KPJB for any injuries to person or property and, at its own expense, defend and hold PT. KPJB harmless against and from any claims or court actions raised by a third party, arising in connection with the performance of the Contract, to the extent they are derived from any fault, negligence, omission or willful action of Supplier or Sub-supplier.

11.2 Supplier's total liability for all claims hereunder, except those based on the title and patent infringement, shall not exceed the total P/O price.

11.3 Supplier shall not be liable for consequential or indirect damages.

Article 12 – Quality Assurance and Inspection

12.1 Supplier shall maintain a quality assurance program and be responsible for the testing and inspection of the equipment, at its own cost, in accordance with the applicable codes and standards and the requirement hereunder. Supplier shall retain quality – related records for the minimum retention period as required by the applicable codes and standards.

12.2 Supplier's inspection of the Equipment is to be final, unless otherwise provided in the P/O. However, PT. KPJB reserves the right to inspect the Equipment and/or witness the testing upon reasonable advance notice to Supplier.

12.3 Supplier shall deliver the Equipment which has complied with testing and inspection and issue a duly signed certificate of inspection for the Equipment.

Article 13 – Taxes

13.1 The Contractor shall be responsible for the payment of all Taxes, fees and assessments imposed or assessed by all local, state or national government authorities outside the Republic of Indonesia.

13.2 Company shall pay all taxes levied by local, state or national government authorities inside the Republic of Indonesia in connection with the performance of the Work under this Contract.

13.3 Each Party shall furnish to the other Party such information, notices, filings and receipts relating to taxes and duties as the other Party may reasonably request.

13.4 Supplier shall be fully responsible for submitting the copy of tax payment evidence (SSP) for this P/O payment not later than 60 days after invoicing document received by KPJB. If not submitted by the supplier until due date of tax payment evidence (SSP) submssion, the supplier will be blacklisted and not be allowed to participate in any future bidding and/or procurement processed by KPJB.

Article 14 – Force Majeure

14.1 Neither Party shall be responsible to the other Party for failure or delay to perform all or any part of the Contract due to force majeure events beyond the reasonable control and without the fault or negligence of the affected Party such as (i) acts of God (ii) acts of the government or the public enemy (iii) fires (iv) floods (v) epidemics (vi) quarantine restrictions (vii) freight embargoes (viii) strikes or (ix) unusually severe weather. In such event, the affected Party is entitled to such extension of time to fulfill its obligations as may be reasonably necessary in the circumstances as agreed to between the Parties.

PLTU Tanjung Jati B Unit 3 & 4
Desa Tubanan Kecamatan Kembang
Kabupaten Jepara Jawa Tengah
Indonesia 59475
Tel: 0291-427-0491 Fax: 0291-427-0601

14.2 The affected Party shall promptly notify in writing the other Party of occurrence of the force majeure event with the documents proving its occurrence.

14.3 If the Force Majeure event continues for sixty (60) days or more, then either party may terminate the Contract in whole or in part, and both parties shall settle outstanding liabilities, except for any claims of either party in connection with the termination.

Article 15 – Termination

15.1 PT. KPJB may terminate the contract, in whole or in part, if;

The liquidated damages to be imposed under Article 8 aggregate to ten (10) percent of the total P/O price and work is not expected to be completed within the schedule hereunder; or

Supplier materially fails to perform any of its obligations hereunder and does not cure the default promptly.

15.2 In such event, PT. KPJB may procure similar equipment or services from another vendor and Supplier shall be liable to PT. KPJB for the excess costs incurred by such procurement.

15.3 The rights and remedies of PT. KPJB in this Article shall be in addition to any other rights and remedies hereunder.

Article 16 – Arbitration

All disputes, controversies or differences which may arise between the Parties, out of or in connection with the Contract, or for the breach thereof, shall be finally settled by arbitration in Jakarta, Indonesia in accordance with the Commercial Arbitration Rules of the Indonesian Commercial Arbitration Board and under the law of Republic of Indonesia.

The award rendered by the arbitrator(s) shall be final and binding upon the Parties.

Article 17 – Governing Law

The contract shall be governed and interpreted by the laws of the Republic of Indonesia.

PLTU Tanjung Jati B Unit 3 & 4
Desa Tubanan Kecamatan Kembang
Kabupaten Jepara Jawa Tengah
Indonesia 59475
Tel: 0291-427-0491 Fax: 0291-427-0601

CHAPTER III

MATERIAL LIST

No.	Item Description	QTY	UNIT
1	Access Ladder for Turbin Turning Gear	1	Pcs

Note: Please use A4 paper for all document bidding

PLTU Tanjung Jati B Unit 3 & 4
Desa Tubanan Kecamatan Kembang
Kabupaten Jepara Jawa Tengah
Indonesia 59475
Tel: 0291-427-0491 Fax: 0291-427-0601

CHAPTER IV
FORMS

4.1 Bid Form
4.1.1 Priced Document

PRICE QUOTATION

COMPANY LOGO>

Quotation
No:

No.	Item Description	QTY	UNIT	Price (IDR)	
				Unit Price	Total
1	Access Ladder for Turbin Turning Gear	1	Pcs		
Sub Total					
VAT (11%)					
Total Amount					

Term and Conditions:

1. The above price are included delivery cost to warehouse of PT. KPJB
2. Please mention Certificate is required at the delivery time
3. Payment will be made by Telegraphic Transfer (T/T) within fourteen (14) days after invoice received, attached with delivery or work completion report issued by PT. KPJB.
4. Please mention Bank Account that will be used for payment (including Bank Name, Bank Address)
5. Please mention Name of Director

Place, [Month] [Date] [Year]
SIGN & COMPANY STAMP
DUTY STAMP / MATERAI 10000
Name
(Title)

PLTU Tanjung Jati B Unit 3 & 4
Desa Tubanan Kecamatan Kembang
Kabupaten Jepara Jawa Tengah
Indonesia 59475
Tel: 0291-427-0491 Fax: 0291-427-0601

4.1.2 Unpriced Quotation Documents Format

UN PRICE QUOTATION

<COMPANY LOGO>
Quotation No:

No.	Item Description	QTY	UNIT	Delivery Time
1	Access Ladder for Turbin Turning Gear	1	Pcs	Not later than **November 30, 2026**

Term and Conditions:

1. The above price are included delivery cost to warehouse of PT. KPJB
2. Please mention Certificate is required at the delivery time
3. Payment will be made by Telegraphic Transfer (T/T) within fourteen (14) days after invoice received, attached with delivery or work completion report issued by PT. KPJB.
4. Please mention Bank Account that will be used for payment (including Bank Name, Bank Address)
5. Please mention Name of Director

Place, [Month] [Date] [Year]
SIGN & COMPANY STAMP
Name
(Title)

1.2 KPJB Contractor Safety Rules

KPJB CONTRACTOR SAFETY RULES — **Revision 00**
ATURAN KESELAMATAN KERJA KONTRAKTOR KPJB — **06 – 03 - 2020**

1. CONTRACTOR SAFETY PLAN

Prior to beginning work, Contractor shall prepare and submit Contractor's Health and Safety Plan to HSE of KPJB according to Site Safety Rule and KPJB Policies. Contractor shall submit the following requirements:

2.1. Copy of signed PO/Work Order/Appointment Letter.

2.2. Company Permit or License by Government.
For special work (such as: underwater, radiography), contractor shall be completed with valid Company Permit or License by Government.

2.3. Work Instruction/Standard Operating Procedure (SOP).

2.4. Contractor should prepare work instruction or SOP which are detailed steps of how to conduct a specific job task and approved by KPJB Engineer's Representative.

2.5. Organization Chart.
Contractor should prepare Organization Chart including contact number of related personnel involved on project.

2.6. Schedule of Project.
Contractor should prepare work schedule approved by KPJB's Engineer Representative. In case there are any changes, updated schedule should be submitted.

2.7. List of Manpower.
- The contractor attaches list of workers and copy of workers' ID involved on the project (KTP/SIM). Copy of Passport, Working Visa for Expatriate workers.
- Minimum age of worker is 17 years old.
- SKCK (Police record) is required during Maintenance and Planned Outage of KPJB.

2.8. Health Statement Letter.
Hospital Record/Health Statement Letter from Hospital or *Puskesmas* is required for all involved workers; with statement letter's minimum validity is 1 (one) month.

2.9. Insurance.
All workers must be protected by insurance, at least BPJS *Ketenagakerjaan* and/or BPJS *Jasa Konstruksi* for certain time and specific work contract, complete with its payment evidence.

2.10. Personnel Competency and Certification.
Copy of workers' certificate shall be attached in accordance with the provisions:
- Driver License: SIM A, B, C.
- Operator License: forklift, lifting, gondola, rigger, crane, radiography.
- Welder.
- Scaffolding technician/operator and supervisor.

2.11. List of PPE, Tools and Emergency Equipment.
- Contractor is required to identify and prepare appropriate PPE. PPE must be in accordance with applicable standards and conditions in KPJB.
- Contractor shall provide safe and feasible tools and equipment's based on contract and scope of work.
- Contractor shall provide safety line/barricade, and safety sign refer to hazard identification.
- Contractor shall prepare emergency equipment to assist handling in certain conditions, i.e.: first aid box and initial fire handling, and so on.

2.12. Drawing / P & ID Diagram.
Contractor shall prepare project drawings or equipment's which have been approved by KPJB's Engineer Representative.

2.13. Risk Assessment.
Contractor shall conduct risk assessment and specific hazard control of conducted work in form of Job Safety Analysis (JSA). This document shall be approved by KPJB Engineer's Representative and HSE. JSA Document shall be informed to all involved workers.

2. SAFETY INDUCTION

2.1. Contractor shall ensure that all works have obtained KPJB's Safety Induction.

2.2. Safety Induction is conducted only after all Health and Safety Plan requirements have been fulfilled. Safety Induction is conducted based on designated schedule by KPJB's HSE.

2.3. Workers which have attended Safety Induction will get "Pass Safety Induction" sticker to easily identify.

3. PERSONAL PROTECTIVE EQUIPMENT

The contractor shall provide Personal Protective Equipment and long sleeve wear pack with contractor identification. Personal Protective Equipment shall be complying with relevant and applicable standards, including:

3.1. Safety helmets with chin strap, long sleeve wear pack/vests, safety shoes, and industrial safety glasses. Safety helmet color regulation in KPJB is:

Red	HSSE
Blue	Technical Advisor
Yellow	Contractor

3.2. Fall protection, safety body harness double hooks should be used for contractor's work in height risk or falling hazards area.

3.3. Other items of personal protective equipment shall be worn as required by risk assessment.

4. SECURITY AND ACCESS CONTROL

4.1. Enter and Exit access to Tanjung Jati B unit #3&4 Site is via Post Main Gate (PLN) and Security 2nd Gate (KPJB).

4.2. Contractors shall conduct registration for:

Yellow Visitor	Permitted only on Admin Building area;
Red Visitor	Permitted to enter site accompanied by KPJB's Employee (not permitted to conduct any works);
Workers' ID Card	Permitted to enter site and work according to approved PO

1

4.3. Enter and Exit is permitted only in Daily working hour (Monday to Friday from 07.30 until 16.30).
4.4. Contractor shall apply Notification of Overtime which approved and signed by PLN and KPJB for any works conducted outside daily working hours.
4.5. For works which conduct in 24 hours' time schedule, Contractors shall regulate it into shift work system.
4.6. Contractor is permitted to enter the site only if have fulfilled following items:
- In a good/healthy condition.
- Attended Safety Induction,
- Obtain and/or change over the ID,
- Wearing proper PPE,

4.7. In case that Contractor need to enter or passing other Units aside from KPJB, they need to inform KPJB's HSE Division and follow the applicable procedures.
4.8. All vehicles must meet the requirements of applicable State Laws concerning safe operation (i.e. driver license, brakes, lights, etc.).
4.9. All personal cars must be parked in designated parking area, which is PLN parking area.
4.10. Three wheels, pickup, and other such vehicles are prohibited from being used to transport of people.
4.11. All vehicles shall be driven at speeds not to exceed the posted speed limit (20 km/h).
4.12. All entry and exit material shall be carried to KPJB Procedure's KPJB-0956-10 Security Procedure:
- All entry materials to KPJB should be completed with Delivery Instruction / PO / Delivery Order,
- All exit materials should be completed with Material Gate Pass,
- Documents and materials will be checked by Security Post Main Gate (PLN) and Security 2nd Gate (KPJB),
- Material entry and exit to/from KPJB should be on daily working hour Monday to Friday 08.00 until 15.00. In case material in/out is not in daily working hour, contractor should prepare notification.

4.13. Contractor shall be submissive and obedient to KPJB and PLN's applicable Security procedure.
4.14. Workers and Visitors are prohibited to carry or conduct: smoking, any weapons, narcotics and alcoholic beverages.

5. MECHANICAL & ELECTRICAL TOOLS

5.1. Contractor must ensure all tools and equipment's must be certified in good and safe condition. All safety devices are installed on all equipment's.
5.2. Contractor ensures equipment's operation shall be in accordance with manufacturer instructions.
5.3. Contractor ensures all broken equipment/tools are tagged or remove from working area so that it will not be used.
5.4. The Contractor's portable lights shall be not more than 50V and provided with transformers.
5.5. Portable Electric Tools and Equipment shall be double pole switched and generally shall be of Very Low Voltage type (less than 110V AC). Alternatively, if it is not possible for Portable Tools and Equipment to operate at Very Low Voltage and they are operated at 220-240V AC then protection by a Residual Current Device (RCD) shall be provided.
5.6. All portable tools and equipment utilized on outdoor construction / installation sites shall be protected by Residual Current Device (RCD).
5.7. RCD's shall be regularly tested to ensure correct operation and shall be provided with a test system for easy testing.
5.8. The Contractor's mechanical & electrical tools shall be registered to Engineer's Representative, and have passed a Portable Mechanical & Electric Tools Test and be suitably tagged before allowed to use on site refers to KPJB Procedures Mechanical Electrical Tools Inspection.
5.9. Installation of leads and cord shall be in proper installed to avoid tripping hazard and run over by vehicle/equipment.
5.10. Prohibited to use double adaptor/plug, piggyback adaptor, and non-industrial electric multi socket (without fuse protection).
5.11. Portable mechanical & electric tools test carried out by KPJB Mechanical & Electrical tools inspector and contractor engineer.
5.12. Portable electric panel distribution board must be equipped with RCD, waterproofing, industrial type plug socket, refers to Indonesian PUIL standard.
5.13. Electric Tools and Equipment that are not in use shall be unplugged and the cables tidied to ensure no tripping hazards.
5.14. If a fuse blows or an RDC is tripped, the Contractor's shall investigate the root cause and report the incident to the Engineer's Representative. If the problem is repeated, the Contractor's personnel shall cease work using the tools and equipment and Contractor's Supervisor shall request an electrician to attend and repair the fault.
5.15. The contractor shall ensure that all gas cylinders for cutting and welding are placed on rack and fitted with suitable Flashback Arresters.
5.16. Lifting tool and lifting tackle shall comply with Indonesian regulation in respect of the examination, test and maintenance record requirements.

6. SAFETY OFFICER / SAFETY MAN

6.1. Contractors are mandatory to appoint Safety Officer/Safety Man which responsible during

PLTU Tanjung Jati B Unit 3 & 4
Desa Tubanan Kecamatan Kembang
Kabupaten Jepara Jawa Tengah
Indonesia 59475
Tel: 0291-427-0491 Fax: 0291-427-0601

period of work to ensure all works are conducted safely and based on procedure. For specific work regulated as follows:

- One safety man for 20 employees is under the control of the contractor (either directly or as sub-contractors). This is also applies into multiples employees amount under control of the contractor.
- Working condition is conducted within 24 hours.
- Working condition which categorized as high risk work such as:
  - Confined space work;
  - Work on flammable area such as on Crusher, Tripper, H2 Plant, and Fuel Oil.
  - Work on hot and high pressure pipe.
  - Under water work.

6.2. The Safety Man / Safety Officer should be:

- Minimum certificated of *AK3 Umum*.
- Understand with the relevant safety, health and environment regulation in Power Plant or Similar Industry.
- Be capable of advising the contractor on the most appropriate control measures and systems of work in order to minimize risk.

7. GENERAL SITE SAFETY

7.1. Contractor is obligated to complete all Permits to Work (PTW) and Safety Permit Form.

7.2. Contractor is obliged to conduct briefing before start working. Risk and potential hazard on working area shall be informed to all workers during briefing session.

7.3. Contractor shall prepare barriers that prevent unauthorized personnel from entering the work site.

7.4. Contractors prepare sign, PPE instruction, and requirements needed to enter the work area.

7.5. Contractor shall ensure machines and equipment are operated only by those who have been authorized and trained.

7.6. Contractor must prepare safe and adequate lighting and ventilation at work site.

7.7. Contractor shall ensure work area clean, tidy and safe. Loose materials, rubbish, tools and equipment placed around the work site shall be kept to a minimum to reduce of hazards.

7.8. Contractor must protect the material/tools from falling while working at height and install warning signs.

7.9. Contractor must ensure no exposed holes be left unattended at any time unless a fence can be erected strong enough to prevent a person falling into the hole.

7.10. Contractor must ensure the walk way and stairways kept clean and free from obstructions. In addition, free access must always be maintained to safety showers, eyewash, and fire protection systems.

7.11. Contractor shall ensure all equipment's/tools shall be inspected periodically and maintained in proper working condition. Any defect must be tagged: "do not use" and remove from service.

7.12. Where the Contractor is required to perform welding, it is responsible for ensuring adequate screens are provided and maintained to protect passers-by from the electric arc and also from spatter produced by the welding process.

7.13. Contractor should equip fire extinguisher at work place as well as should training to easily utilize by any kind of contractor employees.

7.14. Contractor should thoroughly check and make a plan against any gas leakages before and after work prior to in connection with gas work, hermetical place work, welding work, to prevent fire from flammable hazard.

7.15. Contractor should not use firefighting system as any other purposes during work period, such as cleaning, etc.

7.16. KPJB does not permit the smoking of tobacco, in any form, by its workers, contractors in KPJB workplaces. Smoking permitted only in designated / permitted areas.

7.17. Prohibited to take picture and/or video without permission on work location. Picture and video only permitted only for work report.

7.18. Equipment and tools must be returned to their designated storage areas after use.

7.19. Contractor shall be responsible for any damage or loss of the TJB 3&4 asset that is caused by the Contractors, its personnel and its sub-contractors.

7.20. Contractor must complete the Safety Permit Form before performing high risk work, including:

- Confined Space Work
- Welding / Hot Work
- Work at Height
- Lifting Material
- Excavation Work
- Work Surface Water and Under Water
- Radiography
- Work with Chemical Hazard
- Work with Electrical Hazard

8. MATERIAL HANDLING AND STORAGE

8.1. Contractor has responsibility to ensure maximum safety in handling, moving, loading, and unloading materials.

8.2. Special lifting tools shall be operated by authorized as well as competence personnel and based on its function.

8.3. All materials stored in tiers shall be secured to prevent sliding, falling, or collapse.

8.4. Flammable and Combustible Materials shall be stored with due in regard to their fire characteristics. Flammable and combustible material shall only be stored in approved containers and in appropriate quantities for the job site use.

9. HAZARDOUS MATERIALS AND MATERIAL SAFETY DATA SHEETS (MSDS).

PLTU Tanjung Jati B Unit 3 & 4
Desa Tubanan Kecamatan Kembang
Kabupaten Jepara Jawa Tengah
Indonesia 59475
Tel: 0291-427-0491 Fax: 0291-427-0601

9.1. Contractor shall provide a Materials Safety Data Sheet (MSDS) for all chemicals, and lubricants that will be intend to use in the performance of work.
9.2. Contractor shall follow the requirements for storage, handling, and disposal of materials as set by the Engineer's Representative (Chemist/Warehouse/HSE) Division.
9.3. Contractor ensures all chemicals must be stored, labeled, covered or inside at all times in approved containers and labeled as to contents.
9.4. All contractor employees must use proper protective clothing and equipment to prevent contact with hazardous chemicals.

10. DISPOSAL OF HAZARDOUS AND NON-HAZARDOUS WASTE

10.1. Contractor shall be responsible for the correct disposal of all waste generated in undertaking the work.
10.2. Contractor shall analyze any waste generated by his work to identify and determine whether the waste is to be categorized as B3 or not, based on the B3 waste table listed in Government Regulation PP 101 of 2014 concerning B3 waste management.
10.3. Contractor shall handle all B3 class wastes in a proper way that shall not contaminate the environment refer to KPJB Waste Handling Procedure KPJB-0957-03 Waste Management (Hazardous and Non Hazardous) and shall be actively coordinate with Environment Engineers of KPJB HSE Division.

11. SAFETY AND ENVIRONMENT CLEARANCE

Work is considered complete only if contractors have fulfilled following items:
11.1. Conduct Safety Clearance including prepare OSH report covering PTW Clearance, total working hours and Unsafe/Near-miss/Injuries (If any).
11.2. Clean work area from residual work activity including dispose trash/waste accordance with KPJB's Procedure KPJB-0957-03 Waste Management.
11.3. All equipment's, materials and other facilities belong to Contractors shall be immediately removed from working site.

12. EMERGENCY CONDITION

In an emergency condition, the contractor must play an active role in handling the initial emergency condition to prevent greater damage to assets and prevent accidents or fatality in accordance with their capabilities. Steps that can be taken by the contractor include:
12.1. Immediately notify Central Control Room (Ext: 20000). Inform clearly:
- Reporter's identity,
- Location,
- Emergency condition (incident, fire, equipment failure, victims, etc.).

12.2. Contractor performs emergency handling if have ability and safe to do (activate fire alarm, initial fire extinguishing, basic first aid, etc.).
12.3. Contractor ensures their employee immediately go to the nearest assembly point, follow the sign or directive of evacuation officer.
12.4. Contractor ensures that their workers get adequate first aid if any of their workers have a work accident, and help refer them to the hospital if needed.

13. HEALTH, SAFETY AND ENVIRONMENT VIOLATION SANCTION

Sanctions will be given to Contractors who violate the regulation of Safety and Environment Procedure, during normal or emergency working activity in KPJB area. Sanction as follows:
13.1. Direct Warning (1st Warning).
Direct Warning & 1st warning letter is given to Contractor who violates Health, Safety and Environment regulation stated on KPJB Contractor Safety Rules.
13.2. 2nd Warning.
Official 2nd Warning Letter will be issued to Contractor in which during the same contract period, Contractors violate the regulation as stated on KPJB Contractor Safety Rules. Contractors also obliged to replace work supervisor and workers are given sanction and shall be put into blacklist workers/contractors and not allowed to conduct any works in KPJB area for 1 (one) Year.
13.3. 3rd Warning Letter and Black List
Third Warning Letter and Black List will be issued to contractors in which on the same contract period have conducted violation toward these regulations for the 3rd times and reinforced by valid violation evidences, KPJB will give sanction in form of Black List Contractors and not allowed to conduct any work/procurement of Service or Material in KPJB for 1 (one) Year.

14. ATTACHMENT

14.1. KPJB – 0956 – 05 – 10 – FM – 01 Checklist Contractor Document Requirement

ORIGINAL

PLTU Tanjung Jati B Unit 3&4
Desa Tubanan, Kecamatan Kembang
Kabupaten Jepara, Jawa Tengah
Indonesia 59453
Tel: 0291-427-0493 Fax: 0291-427-0601

I. Purpose

To accommodate the operator in turning manually the turbine turning gear if the turning gear is damaged (emergency case), where the height of the turning gear is + 200 cm so that the operator needs an additional ladder to make it easier for the operator to manually turn the turning gear. In order to support that operational activity especially for operator, we would like to purchase/fabricate the ladder as follow.

II. Item to be Purchased

- Estimated budget : [redacted]ding tax]
- Budget source : Performance Test, Shutdown-Startup Unit, and Other Test
- Budget code : 300100 – 506
- Available budget : [redacted]

No	Item	Utilization	Qty	Unit Price	Total Price
1	Turbine Turning Gear Access Ladder	Accommodate the operator in turning manually the turbine turning gear if the turning gear is damaged (emergency case)	1 pcs	10,200,000	10,200,000
Total Price [IDR]					10,200,000
VAT [11%]					1,122,000
Grand Total					11,322,000

III. Procurement Matter

- These materials will be purchased with bidding method by F&A Division.

IV. Attachment

- Concept design picture.
- Quotation price.

Budget Control		
Budget Code : 506 OPR 584		
PREPARED BY	REVIEWED BY	APPROVED BY
DATE :	DATE :	DATE :

PLTU Tanjung Jati B Unit 3&4
Desa Tubanan, Kecamatan Kembang
Kabupaten Jepara, Jawa Tengah
Indonesia 59453
Tel: 0291-427-0493 Fax: 0291-427-0601

ORIGINAL

Attachment :

Concept Design Picture

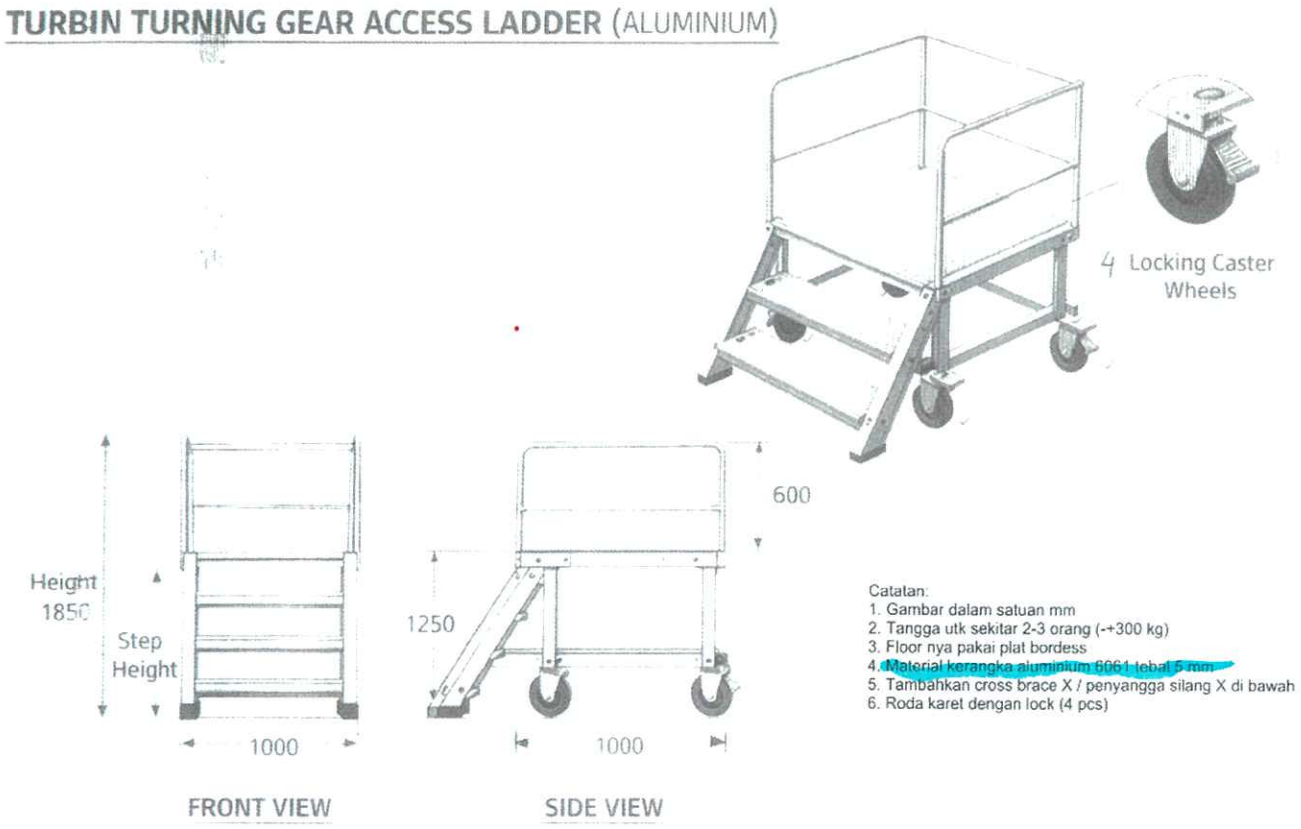

Attachment PO KPJB-NR-2026-0211

GENERAL TERMS AND CONDITIONS FOR CONTRACT (GTC)

These General Terms and Conditions (GTC) are applicable to the Purchase Order (P/O) placed by PT. KOMIPO PEMBANGKITAN JAWA BALI (PT. KPJB) for the purchase of Equipment and/or Services as specified in the P/O, to which PT. KPJB and Supplier shall be bound.

Article 1 – Definitions

The following terms used herein shall have the meanings as set forth below:

A. "PT. KPJB" means PT. KOMIPO PEMBANGKITAN JAWA BALI Which purchases the Equipment and/or Services hereunder, and which expression shall include its legal representatives, authorized agents, successors, and assignees.
B. "Supplier" means the person, corporation, legal representatives and/or authorized agents that provide the Equipment and/or services under contract.
C. "Contract" means the contract entered into by and between the parties, which concludes the P/O placed by PT. KPJB and acknowledged by Supplier for the purchases of the Equipment and/or services.
D. "Party" means either PT. KPJB or Supplier as the case may be. "Parties" means both PT. KPJB and Supplier.
E. "Equipment and/or services" means the machinery, components, parts, devices, appliances, apparatus, tools, goods and/or related services to be provided by the Supplier under contract.
F. "Work" means all of the obligations and responsibilities to be performed by supplier hereunder, including the supply of the Equipment and/or services.
G. "Local procurement" means procurement from the supplier in Indonesia.
H. "Foreign procurement" means procurement from the supplier out of Indonesia

Article 2 – Effectiveness of the P/O

PO effective date is 2 (two) calendar days after PT. Komipo Pembangkitan Jawa Bali approval date.

Article 3 –Contract Document and Language

3.1 The Contract documents consist of the P/O including the document attached thereto and this GTC. In case of any inconsistency between them, the P/O shall govern.
3.2 All documents and communications hereunder shall be in Bilingual (English language and Bahasa Indonesia) or English language.

Article 4 – General Provisions

4.1 The trade terms shall be subject to INCOTERMS 2000 and its amendments, unless otherwise provided in the contract.
4.2 The number of days shall be calculated based on the actual calendar days including Saturdays, Sundays and official holidays in Indonesia, and if any specific day falls on Saturday, Sunday or a holiday, the day shall be postponed to the immediately following business day.
4.3 The Equipment and/or Services to be provided hereunder shall conform to the applicable laws, regulations, codes, standards and the specifications hereof. Supplier shall provide the new and unused products suitable in all respects for the purposes intended herein and shall use the best possible design and engineering. The specifications not adequately described herein shall be in accordance with the best commercial practices.
4.4 Supplier shall be fully responsible for the work performed by its Sub-supplier.
4.5 All fittings necessary to complete the Equipment shall be provided by Supplier at no additional charge beyond the price specified in the P/O. No additional payment for ancillary items shall be made unless such items and prices thereof have been authorized by PT. KPJB in the P/O.

Article 5 – Interpretation

In the event of any disagreement between the Parties with respect to the provisions of the Contract, the interpretation of PT. KPJB shall govern, until an arbitration award is rendered in accordance with Article 15.

Article 6 – Terms of Payment

6.1 The P/O price specified in the P/O is fixed and is not subject to price fluctuations.
6.2 The P/O price shall be paid by means of bank account transfer or telegraphic transfer (T/T) or irrevocable letter of credit (L/C), as agreed to between the Parties, to Supplier against the Supplier's presentations of certificate of delivery of equipment or certificate of completion of work for local procurement, or the following transport documents for the foreign procurement:

A. Commercial Invoice: one (1) original and three (3) copies.
B. Clean on Board Ocean Vessel Bill of Lading or Air Waybill consigned to PT. KPJB : one (1) full set of original and three (3) copies
C. Packing List : one (1) full set of original and three (3) copies
D. Certificate of Manufacturer's Final Inspection : one (1) original and three (3) copies, not applicable
E. Certificate of Origin : one (1) original and three (3) copies, not applicable
F. Freight Forwarder's Certificate of receipt : one (1) original and three (3) copies, not applicable
G. Other documents as required by the P/O.

6.3 In case of T/T payment for foreign procurement, Supplier shall promptly send the transport documents listed above to PT. KPJB and the payment shall be made within fourteen (14) days after the delivery date, unless otherwise provided herein.
6.4 In case L/C payment, Supplier shall submit the original copy of the transport documents listed above to the bank according to the L/C conditions and the copies of them shall be sent to PT. KPJB promptly. One (1) copy of the above documents shall be additionally enclosed in each package of the Equipment.
6.5 In case of Bank Account Transfer Payment for local procurement, the payment will be made by PT. KPJB within fourteen (14) days after invoice received by PT. KPJB after delivery or work completion.
6.6 Unless otherwise provided in the P/O, supplier shall bear any kind of banking charges and other expenses incurred in connection with the payment.

Article 7 – Delivery Terms and Shipment

7.1 Unless otherwise provided in the P/O, the delivery of the Equipment shall be effected hereunder in terms of Delivery to the designated place of the Power Plant site for local procurement, or FCA named place by PT. KPJB or a freight forwarder selected by PT. KPJB for the foreign procurement.
Supplier shall arrange shipment of the Equipment through PT. KPJB's freight Forwarder, if Supplier fails to do so and excess expenses are incurred to PT. KPJB thereby, he/she shall reimburse such expenses within thirty (30) days after PT. KPJB's request for payment.
7.2 Supplier shall notify PT. KPJB and the freight forwarder of delivery or shipping readiness by telefax or by any other official letter at the latest fifteen (15) days prior to readiness so that PT. KPJB may arrange the shipment and insurance coverage. Such notice shall include a port of loading, shipping items, total tonnage, cubic measurement, invoice amount and expected delivery date.
7.3 For foreign procurement, Supplier shall pack the Equipment in accordance with the best export-packing practices to prevent physical and environmental damage. Supplier shall be liable for any loss or damages caused by inadequate packing.
7.4 Any proper handling caution marks or instructions and the following information shall be durably marked on the surface of the package.

A. Consignee (PT. KPJB) and Consigner (supplier Name)
B. P/O No. and L/C No. (if applicable)
C. Port of Export and Destination
D. Item No. and Description specified in the P/O and Quantity
E. Net and Gross Weight and Cubic Measurement
F. Origin
G. Caution Marks such as Fragile (if applicable)
H. Material Safety Data Sheets (MSDS) and other related document for Hazardous material.
I. Other Markings as required.

7.5 Unless requested or approved by PT. KPJB, Supplier shall not deliver the Equipment early than one (1) month prior to the delivery schedule hereunder. In case of a breach thereof, PT. KPJB is entitled to delay the payment or claim interest to Supplier if already paid by L/C.

Article 8 – Liquidated Damages for Delayed Delivery

8.1 In the event that, for reasons attributable to Supplier and not excusable under Article 11, the delivery of any item of the Equipment is delayed beyond the delivery date provided in the P/O, Supplier shall pay liquidated damages to PT. KPJB, not as a penalty, in an amount of zero point one (0.1) percent of total contract amount for each day of delay unless otherwise provided in the P/O. The liquidated damages shall not exceed five (5) percent of the total P/O price.
8.2 PT. KPJB is entitled to deduct liquidated damages from any payment due supplier.

Article 9 – Performance Bond (if applicable)

9.1 Unless exempted by the P/O or approved by PT. KPJB, within twenty (20) days after the effective date of the P/O, Supplier shall establish a performance bond in favor of PT. KPJB in a form of a bank guarantee, certified check or irrevocable clean credit in an amount not less than ten (5) percent of the P/O price. The bond shall be valid until one (2) months after the expiry date of the warranty period or any extension thereof as provided in Article 10.
9.2 The bond shall be an absolute and unconditional guarantee and payable to PT. KPJB forthwith on PT. KPJB's simple demand of payment in the event that Supplier fails or refuses to promptly cure any default of its obligations hereunder.
9.3 A performance bond is not required on the following conditions
- Purchase Order amount is below IDR 500,000,000 or its equivalent currencies

Article 10 – Warranty

10.1 Supplier shall warrant that the Equipment and/or Services provided hereunder are free from defect in design, materials, workmanship, packing, title and patent. This warranty shall remain valid until twelve (12) months after the actual delivery date.
10.2 Upon receipt of PT. KPJB's notice of any defect, Supplier shall promptly correct the defect by repair, replacement, modification and/or reperfomance at its own cost including transportation charges, duties, labor costs and removal costs incurred by such correction.
10.3 In the event that PT. KPJB decides not to correct or partially correct the defect, Supplier shall refund an equitable amount to PT. KPJB through mutual agreement.
10.4 If supplier fails to correct the defect as provided herein, PT. KPJB may reject the defective Equipment and procure the similar equipment elsewhere. In such event, Supplier shall return the amount paid by PT. KPJB and be liable for any excess costs incurred by PT. KPJB for such procurement.
10.5 The warranty period for the Equipment or Services corrected shall be extended by twelve (12) months from the completion date of such correction.
10.6 The warranties provided herein are exclusive and no other warranties shall apply.

Article 11 – Liabilities

11.1 Supplier shall be liable to and indemnify PT.KPJB for any injuries to person or property and, at its own expense, defend and hold PT. KPJB harmless against and from any claims or court actions raised by a third party, arising in connection with the performance of the Contract, to the extent they are derived from any fault, negligence, omission or willful action of Supplier or Sub-supplier.
11.2 Supplier's total liability for all claims hereunder, except those based on the title and patent infringement, shall not exceed the total P/O price.
11.3 Supplier shall not be liable for consequential or indirect damages.

Article 12 – Quality Assurance and Inspection

12.1 Supplier shall maintain a quality assurance program and be responsible for the testing and inspection of the equipment, at its own cost, in accordance with the applicable codes and standards and the requirement hereunder. Supplier shall retain quality – related records for the minimum retention period as required by the applicable codes and standards.
12.2 Supplier's inspection of the Equipment is to be final, unless otherwise provided in the P/O. However, PT. KPJB reserves the right to inspect the Equipment and/or witness the testing upon reasonable advance notice to Supplier.
12.3 Supplier shall deliver the Equipment which has complied with testing and inspection and issue a duly signed certificate of inspection for the Equipment.

Article 13 – Taxes

13.1 The Contractor shall be responsible for the payment of all Taxes, fees and assessments imposed or assessed by all local, state or national government authorities outside the Republic of Indonesia.
13.2 Company shall pay all taxes levied by local, state or national government authorities inside the Republic of Indonesia in connection with the performance of the Work under this Contract.
13.3 Each Party shall furnish to the other Party such information, notices, filings and receipts relating to taxes and duties as the other Party may reasonably request.
13.4 Supplier shall be fully responsible for submitting the copy of tax payment evidence (SSP) for this P/O payment not later than 60 days after invoicing document received by KPJB. If not submitted by the supplier until due date of tax payment evidence (SSP) submssion, the supplier will be blacklisted and not be allowed to participate in any future bidding and/or procurement processed by KPJB.

Article 14 – Force Majeure

14.1 Neither Party shall be responsible to the other Party for failure or delay to perform all or any part of the Contract due to force majeure events beyond the reasonable control and without the fault or negligence of the affected Party such as (i) acts of God (ii) acts of the government or the public enemy (iii) fires (iv) floods (v) epidemics (vi) quarantine restrictions (vii) freight embargoes (viii) strikes or (ix) unusually severe weather. In such event, the affected Party is entitled to such extension of time to fulfill its obligations as may be reasonably necessary in the circumstances as agreed to between the Parties.
14.2 The affected Party shall promptly notify in writing the other Party of occurrence of the force majeure event with the documents proving its occurrence.
14.3 If the Force Majeure event continues for sixty (60) days or more, then either party may terminate the Contract in whole or in part, and both parties shall settle outstanding liabilities, except for any claims of either party in connection with the termination.

Article 15 – Termination

15.1 PT. KPJB may terminate the contract, in whole or in part, if;

A. The liquidated damages to be imposed under Article 8 aggregate to five (5) percent of the total P/O price and work is not expected to be completed within the schedule hereunder; or
B. Supplier materially fails to perform any of its obligations hereunder and does not cure the default promptly.
C. If delivery time and/or work completion date exceeds more than 50 calendar days delay or if the penalty amount has exceeded the Performance Bond amount, then:
D. PT. KPJB can terminate the PO or Contract unilaterally, and the Performance Bond will be redeemed and the supplier will be proposed in the blacklist supplier, or
E. KPJB can be consider giving the supplier as additional opportunity to complete the deliver and/or the work, but a maximum penalty for delay will be imposed on the supplier.

15.2 In such event, PT. KPJB may procure similar equipment or services from another vendor and Supplier shall be liable to PT. KPJB for the excess costs incurred by such procurement.
15.3 The rights and remedies of PT. KPJB in this Article shall be in addition to any other rights and remedies hereunder.

Article 16 – Arbitration

All disputes, controversies or differences which may arise between the Parties, out of or in connection with the Contract, or for the breach thereof, shall be finally settled by arbitration in Jakarta, Indonesia in accordance with the Commercial Arbitration Rules of the Indonesian Commercial Arbitration Board and under the law of Republic of Indonesia.
The award rendered by the arbitrator(s) shall be final and binding upon the Parties.

Article 17 – Governing Law

The contract shall be governed and interpreted by the laws of the Republic of Indonesia.

1. CONTRACTOR SAFETY PLAN

Prior to beginning work, Contractor shall prepare and submit Contractor's Health and Safety Plan to HSE of KPJB according to Site Safety Rule and KPJB Policies. Contractor shall submit the following requirements:

2.1. Contractor who will work are Mandatory required to have a valid PLN CSMS (Contractor Safety Management System) certificate according to Risk Level at Certificate Level.

2.2. Copy of signed PO/Work Order/Appointment Letter.

2.3. Company Permit or License by Government.
for special work (such as: underwater, radiography), contractor shall be completed with valid Company Permit or License by Government.

2.4. Work Instruction/Standard Operating Procedure (SOP)
Contractor should prepare work instruction or SOP which are detailed steps of how to conduct a specific job task and approved by KPJB Engineer's Representative (User).

2.5. Organization Chart.
Contractor should prepare Organization Chart including contact number of related personnel involved on project. Including approval by KPJB Engineer's Representative (User).

2.6. Schedule of Project.
Contractor should prepare work schedule approved by KPJB's Engineer Representative. In case there are any changes, updated schedule should be submitted.

2.7. List of Manpower.
- The contractor attaches list of workers and copy of workers' ID involved on the project (KTP/SIM). Copy of Passport, Working Visa for Expatriate workers.
- Minimum age of worker is 17 years old. Maximum age of worker is 45 years old for technician/helper level or high risk activity.
- Surat Keterangan Catatan Kepolisian (SKCK) (Police record) which is still valid.

2.8. Health Statement Letter.
Hospital Record/Health Statement Letter from Hospital or *Puskesmas* is required for all involved workers; with statement letter's maximum validity is 1 (one) month.

2.9. Insurance.
All workers must be protected by insurance, at least BPJS *Ketenagakerjaan* and/or BPJS *Jasa Konstruksi* for certain time and specific work contract, complete with its payment evidence.

2.10. Personnel Competency and Certification.
Copy of workers' certificate shall be attached in accordance with the provisions:
- Driver License: SIM A, B, C.
- Operator License: forklift, lifting, gondola, rigger, crane, radiography.
- Welder.
- Scaffolding technician/operator and supervisor.

2.11. List of PPE, Tools and Emergency Equipment.
- Contractor is required to identify and prepare appropriate PPE. PPE must be in accordance with applicable standards and conditions in KPJB.
- Contractor shall provide safe and feasible tools and equipment's based on contract and scope of work.
- Contractor shall provide safety line/barricade, and safety sign refer to hazard identification.
- Contractor shall prepare emergency equipment to assist handling in certain conditions, i.e.: first aid box and initial fire handling, and so on.

2.12. Drawing / P & ID Diagram.
Contractor shall prepare project drawings or equipment's which have been approved by KPJB's Engineer Representative.

2.13. Risk Assessment.
Contractor shall conduct risk assessment and specific hazard control of conducted work in form of Job Safety Analysis (JSA). This document shall be approved by KPJB Engineer's Representative and HSE. JSA Document shall be informed to all involved workers.

2. SAFETY INDUCTION

2.1. Contractor shall ensure that all works have obtained KPJB's Safety Induction.

2.2. Safety Induction is conducted only after all Health and Safety Plan requirements have been fulfilled. Safety Induction is conducted based on designated schedule by KPJB's HSE.

2.3. Workers which have attended Safety Induction will get "Pass Safety Induction" sticker to easily identify.

2.4. All manpower of contractor mandatory fill and sign "Compliance Commitment Statement Health Safety Security and Environment"

3. PERSONAL PROTECTIVE EQUIPMENT

The contractor shall provide Personal Protective Equipment and long sleeve wear pack with contractor identification. Personal Protective Equipment shall be complying with relevant and applicable standards, including:

3.1. Safety helmets with chin strap, long sleeve wear pack/vests, safety shoes, and industrial safety glasses. Safety helmet color regulation in KPJB is:

Red	HSSE

Blue	Technical Advisor
Yellow	Contractor

3.2. Fall protection, safety body harness double hooks should be used for contractor's work in height risk or falling hazards area.
3.3. Other items of personal protective equipment shall be worn as required by risk assessment.
3.4. Contractor must be ensure the condition of PPE including list of inspection.

4. SECURITY AND ACCESS CONTROL

4.1. Enter and Exit access to Tanjung Jati B unit #3&4 Site is via Post Main Gate (PLN) and Security 2nd Gate (KPJB).
4.2. Contractors shall conduct registration for:

Yellow Visitor	Permitted only on Admin Building area;
Red Visitor	Permitted to enter site accompanied by KPJB's Employee (not permitted to conduct any works);
Workers' ID Card	Permitted to enter site and work according to approved PO

4.3. Enter and Exit is permitted only in Daily working hour (Monday to Friday from 07.30 until 16.30).
4.4. Contractor shall apply Notification of Overtime which approved and signed by PLN and KPJB for any works conducted outside daily working hours.
4.5. For works which conduct in 24 hours' time schedule, Contractors shall regulate it into shift work system.
4.6. Contractor is permitted to enter the site only if have fulfilled following items:
- In a good/healthy condition.
- Attended Safety Induction,
- Obtain and/or change over the ID,
- Wearing proper PPE,

4.7. In case that Contractor need to enter or passing other Units aside from KPJB, they need to inform KPJB's HSE Division and follow the applicable procedures.
4.8. All vehicles must meet the requirements of applicable State Laws concerning safe operation (i.e. driver license, brakes, lights, etc.).
4.9. All personal cars must be parked in designated parking area, which is PLN parking area.
4.10. Three wheels, pickup, and other such vehicles are prohibited from being used to transport of people.
4.11. All vehicles shall be driven at speeds not to exceed the posted speed limit (20 km/h).
4.12. All entry and exit material shall be carried to KPJB Procedure's KPJB-0956-10 Security Procedure:
- All entry materials to KPJB should be completed with Delivery Instruction / PO / Delivery Order,
- All exit materials should be completed with Material Gate Pass,
- Documents and materials will be checked by Security Post Main Gate (PLN) and Security 2nd Gate (KPJB),
- Material entry and exit to/from KPJB should be on daily working hour Monday to Friday 08.00 until 15.00. In case material in/out is not in daily working hour, contractor should prepare notification.

4.13. Contractor shall be submissive and obedient to KPJB and PLN's applicable Security procedure.
4.14. Workers and Visitors are prohibited to carry or conduct: smoking, any weapons, narcotics and alcoholic beverages.

5. MECHANICAL & ELECTRICAL TOOLS

5.1. Contractor must ensure all tools and equipment's must be certified in good and safe condition. All safety devices are installed on all equipment's.
5.2. Contractor ensures equipment's operation shall be in accordance with manufacturer instructions.
5.3. Contractor ensures all broken equipment/tools are tagged or remove from working area so that it will not be used.
5.4. The Contractor's portable lights shall be not more than 50V and provided with transformers.
5.5. Portable Electric Tools and Equipment shall be double pole switched and generally shall be of Very Low Voltage type (less than 110V AC). Alternatively, if it is not possible for Portable Tools and Equipment to operate at Very Low Voltage and they are operated at 220-240V AC then protection by a Residual Current Device (RCD) shall be provided.
5.6. All portable tools and equipment utilized on outdoor construction / installation sites shall be protected by Residual Current Device (RCD).
5.7. RCD's shall be regularly tested to ensure correct operation and shall be provided with a test system for easy testing.
5.8. The Contractor's mechanical & electrical tools shall be registered to Engineer's Representative, and have passed a Portable Mechanical & Electric Tools Test and be suitably tagged before allowed to use on site refers to KPJB Procedures Mechanical Electrical Tools Inspection.
5.9. Installation of leads and cord shall be in proper installed to avoid tripping hazard and run over by vehicle/equipment.
5.10. Prohibited to use double adaptor/plug, piggyback adaptor, and non-industrial

electric multi socket (without fuse protection).

5.11. Portable mechanical & electric tools test carried out by KPJB Mechanical & Electrical tools inspector and contractor engineer.

5.12. Portable electric panel distribution board must be equipped with RCD, waterproofing, industrial type plug socket, refers to Indonesian PUIL standard.

5.13. Electric Tools and Equipment that are not in use shall be unplugged and the cables tidied to ensure no tripping hazards.

5.14. If a fuse blows or an RDC is tripped, the Contractor's shall investigate the root cause and report the incident to the Engineer's Representative. If the problem is repeated, the Contractor's personnel shall cease work using the tools and equipment and Contractor's Supervisor shall request an electrician to attend and repair the fault.

5.15. The contractor shall ensure that all gas cylinders for cutting and welding are placed on rack and fitted with suitable Flashback Arresters.

5.16. Lifting tool and lifting tackle shall comply with Indonesian regulation in respect of the examination, test and maintenance record requirements.

6. CONTRACTOR SUPERVISOR

6.1. Contractors are mandatory to appoint Technical Supervisor / Leader which responsible during period of work to ensure all works are conducted safely and based on procedure.

6.2. Contractor Technical Supervisor / Leader mandatory obtain a competency certificate according field of project as follows (but limited):

- Electrical Field (Power Plant) : Serfitikat Kompetensi Tenaga Teknik Ketenagalistrikan (SKTTK)
- Contruction / Civil : Sertifikat Kompetensi Kementrian Pekerjaan Umum dan Perumahan Rakyat.

7. SAFETY OFFICER / SAFETY MAN

7.1. Contractors are mandatory to appoint Safety Officer/Safety Man which responsible during period of work to ensure all works are conducted safely and based on procedure. For specific work regulated as follows:

- One safety man for 20 employees is under the control of the contractor (either directly or as sub-contractors). This is also applies into multiples employees amount under control of the contractor.
- Working condition is conducted within 24 hours.
- Working condition which categorized as high risk work such as:
  - Confined space work;
  - Work on flammable area such as on Crusher, Tripper, H2 Plant, and Fuel Oil.
  - Work on hot and high pressure pipe.
  - Under water work.

7.2. The Safety Man / Safety Officer should be:

- Minimum certificated of *AK3 Umum.*
- Understand with the relevant safety, health and environment regulation in Power Plant or Similar Industry.
- Be capable of advising the contractor on the most appropriate control measures and systems of work in order to minimize risk.

8. GENERAL SITE SAFETY

8.1. Contractor is obligated to complete all Permits to Work (PTW) and Safety Permit Form.

8.2. Contractor is obliged to conduct briefing before start working / Daily Toolbox Meeting. Risk and potential hazard on working area shall be informed to all workers during briefing session.

8.3. Contractor must be reporting the Daily Toolbox Meeting including attendance and documentation activity.

8.4. Contractor shall prepare barriers that prevent unauthorized personnel from entering the work site.

8.5. Contractors prepare sign, PPE instruction, and requirements needed to enter the work area.

8.6. Contractor shall obtain procedure of operational equipment/ tools.

8.7. Contractor shall ensure machines and equipment are operated only by those who have been authorized and trained.

8.8. Contractor must prepare safe and adequate lighting and ventilation at work site.

8.9. Contractor shall ensure work area clean, tidy and safe. Loose materials, rubbish, tools and equipment placed around the work site shall be kept to a minimum to reduce of hazards.

8.10. Contractor must protect the material/tools from falling while working at height and install warning signs.

8.11. Contractor must ensure no exposed holes be left unattended at any time unless a fence can be erected strong enough to prevent a person falling into the hole.

8.12. Contractor must ensure the walk way and stairways kept clean and free from obstructions. In addition, free access must always be maintained to safety showers, eyewash, and fire protection systems.

8.13. Contractor shall ensure all equipment's/tools shall be inspected periodically and maintained in proper working condition. Any defect must be

tagged: "do not use" and remove from service.

8.14. Where the Contractor is required to perform welding, it is responsible for ensuring adequate screens are provided and maintained to protect passers-by from the electric arc and also from spatter produced by the welding process.

8.15. Contractor should equip fire extinguisher at work place as well as should training to easily utilize by any kind of contractor employees.

8.16. Contractor should thoroughly check and make a plan against any gas leakages before and after work prior to in connection with gas work, hermetical place work, welding work, to prevent fire from flammable hazard.

8.17. Contractor should not use firefighting system as any other purposes during work period, such as cleaning, etc.

8.18. KPJB does not permit the smoking of tobacco, in any form, by its workers, contractors in KPJB workplaces. Smoking permitted only in designated / permitted areas.

8.19. Prohibited to take picture and/or video without permission on work location. Picture and video only permitted only for work report.

8.20. Equipment and tools must be returned to their designated storage areas after use.

8.21. Contractor shall be responsible for any damage or loss of the TJB 3&4 asset that is caused by the Contractors, its personnel and its sub-contractors.

8.22. Contractor must complete the Safety Permit Form before performing high risk work, including:

- 8.22.1. Confined Space Work
- 8.22.2. Welding / Hot Work
- 8.22.3. Work at Height
- 8.22.4. Lifting Material
- 8.22.5. Excavation Work
- 8.22.6. Work Surface Water and Under Water
- 8.22.7. Radiography
- 8.22.8. Work with Chemical Hazard
- 8.22.9. Work with Electrical Hazard

9. MATERIAL HANDLING AND STORAGE

9.1. Contractor has responsibility to ensure maximum safety in handling, moving, loading, and unloading materials.

9.2. Special lifting tools shall be operated by authorized as well as competence personnel and based on its function.

9.3. All materials stored in tiers shall be secured to prevent sliding, falling, or collapse.

9.4. Flammable and Combustible Materials shall be stored with due in regard to their fire characteristics. Flammable and combustible material shall only be stored in approved containers and in appropriate quantities for the job site use.

10. HAZARDOUS MATERIALS AND MATERIAL SAFETY DATA SHEETS (MSDS).

10.1. Contractor shall provide a Materials Safety Data Sheet (MSDS) for all chemicals, and lubricants that will be intend to use in the performance of work.

10.2. Contractor shall follow the requirements for storage, handling, and disposal of materials as set by the Engineer's Representative (Chemist/Warehouse/HSE) Division.

10.3. Contractor ensures all chemicals must be stored, labeled, covered or inside at all times in approved containers and labeled as to contents.

10.4. All contractor employees must use proper protective clothing and equipment to prevent contact with hazardous chemicals.

11. DISPOSAL OF HAZARDOUS AND NON-HAZARDOUS WASTE

11.1. Contractor shall be responsible for the correct disposal of all waste generated in undertaking the work.

11.2. Contractor shall analyze any waste generated by his work to identify and determine whether the waste is to be categorized as B3 or not, based on the B3 waste table listed in Government Regulation PP 22 of 2021 concerning B3 waste management.

11.3. Contractor shall handle all B3 class wastes in a proper way that shall not contaminate the environment refer to KPJB Waste Handling Procedure KPJB-0957-03 Waste Management (Hazardous and Non Hazardous) and shall be actively coordinate with Environment Engineers of KPJB HSE Division.

12. SAFETY AND ENVIRONMENT CLEARANCE

Work is considered complete only if contractors have fulfilled following items:

12.1. Conduct Safety Clearance including prepare OSH report covering PTW Clearance, total working hours and Unsafe/Near-miss/Injuries (If any).

12.2. Clean work area from residual work activity including dispose trash/waste accordance with KPJB's Procedure KPJB-0957-03 Waste Management.

12.3. All equipment's, materials and other facilities belong to Contractors shall be immediately removed from working site.

13. EMERGENCY CONDITION

In an emergency condition, the contractor must play an active role in handling the initial emergency condition to prevent greater damage to assets and prevent accidents or fatality in

accordance with their capabilities. Steps that can be taken by the contractor include:

13.1. Immediately notify Central Control Room (Ext: 20000). Inform clearly:
- Reporter's identity,
- Location,
- Emergency condition (incident, fire, equipment failure, victims, etc.).

13.2. Contractor performs emergency handling if have ability and safe to do (activate fire alarm, initial fire extinguishing, basic first aid, etc.).

13.3. Contractor ensures their employee immediately go to the nearest assembly point, follow the sign or directive of evacuation officer.

13.4. Contractor ensures that their workers get adequate first aid if any of their workers have a work accident, and help refer them to the hospital if needed.

13.5. Contractor must be prepared and submit Structure of Emergency Condition Organization, the document including appointment personnel with responsibility handling during emergency condition.

14. HEALTH, SAFETY AND ENVIRONMENT VIOLATION SANCTION

Sanctions will be given to Contractors who violate the regulation of Safety and Environment Procedure, during normal or emergency working activity in KPJB area. Sanction as follows:

14.1. Direct Warning (1st Warning).
Direct Warning & 1st warning letter is given to Contractor who violates Health, Safety and Environment regulation stated on KPJB Contractor Safety Rules.

14.2. 2nd Warning.
Official 2nd Warning Letter will be issued to Contractor in which during the same contract period, Contractors violate the regulation as stated on KPJB Contractor Safety Rules. Contractors also obliged to replace work supervisor and workers are given sanction and shall be put into blacklist workers/contractors and not allowed to conduct any works in KPJB area for 1 (one) Year.

14.3. 3rd Warning Letter and Black List
Third Warning Letter and Black List will be issued to contractors in which on the same contract period have conducted violation toward these regulations for the 3rd times and reinforced by valid violation evidences, KPJB will give sanction in form of Black List Contractors and not allowed to conduct any work/procurement of Service or Material in KPJB for 1 (one) Year.

15. ATTACHMENT

14.1. Flowchart works permit for contractor.
14.2. Form checks list contractor control.
14.3. Form Permit to Work (PTW).
14.4. Compliance Commitment Statement HSSE

DOCUMENT PROCUREMENT
RFQ NO. KPJB-NR-2026-0211

URGENT

NAMA PERUSAHAAN :

ALAMAT / TELP. :

SUBJECT / NO. RFQ :

WAKTU CLOSE BID : (Selasa, 17 November 2026) Jam 11.00 WIB

To : **Ulfa Nikmatul Lutfiana**
PT. Komipo Pembangkitan Jawa Bali (KPJB)
PLTU Tanjung Jati B Unit 3 & 4
Ds Tubanan, Kec Kembang,
Kab Jepara, 59475 Jawa Tengah
Telp : 0291-4270493