The Aanwizjing Result of RFQ NO: K19453

Day / Date: Friday, August 28, 2026.
Time: 10.00 WIB – Finish.
Venue: Zoom
Administration:

Before:	After:
• **Delivery time: not later than November 02, 2026.**	• **Delivery time: not later than 90 calendar days after PO effective date.**

Technical:

Before:	After:
	• Please see attachment the detail drawing.

Note:

- Closing date of bidding document submission: not later than **11.00 WIB date September 08, 2026** at 2nd gate of PT. KPJB's security.
- The quotation shall be submitted in one sealed envelope containing both the priced and unpriced proposals.
- Payment will be made by Telegraphic Transfer (T/T) fortyfive (45) days after invoice received, attached with delivery or work completion report issued by PT.KPJB.
- The others clauses, terms and conditions of this RFQ that not speicifed in this MOM of aanwijzing and not against this MOM of aanwijzing still remains unchanged.
- Duty stamp for quotation should follow the new Government's regulation (duty stamp 10.000).
- KPJB safety rules and GTC as attached.
- Term of Refference as attached.

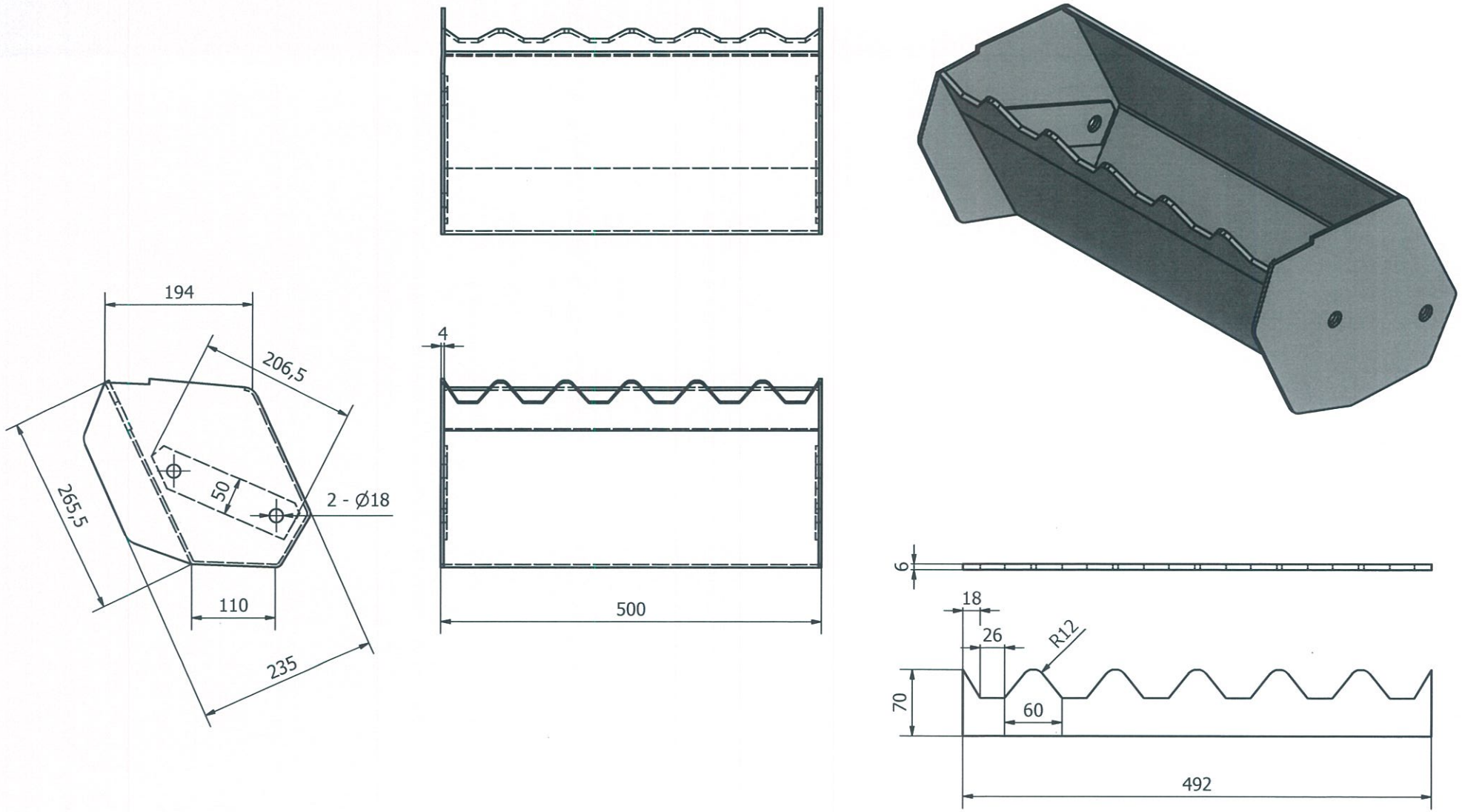

Flow Prosses							
PROSSES	Toll/MC	Flow	Flow	Prosses	Toll/MC	Flow	Flow
Cutting				Heat Treat			
Machining	BUBUT	1		Coating			
Roll				Painting			
Bending				Qc		2	
Welding				Logistic		3	

PROJ'	Designed by	Checked by	Approved by	Cust. Approve	TITLE	Bucket Elevator
SCALE					DWG NO	Assembly Bucket Elevator
-					Material 3CR12	Date 26/01/2017 · Qty 30 unit · Edition 00 · Sheet 1 / 1

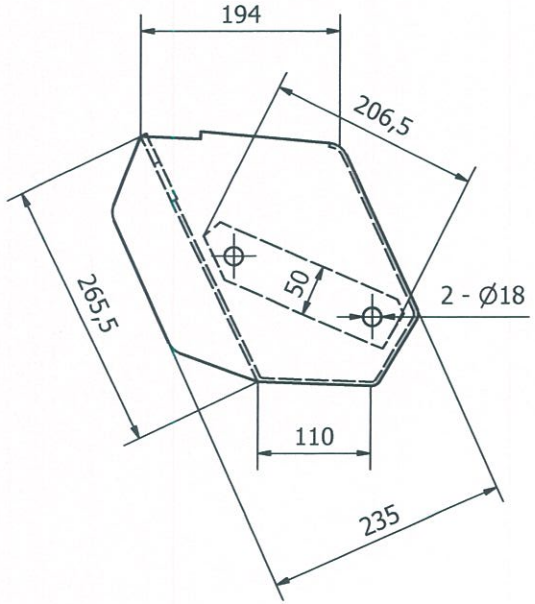

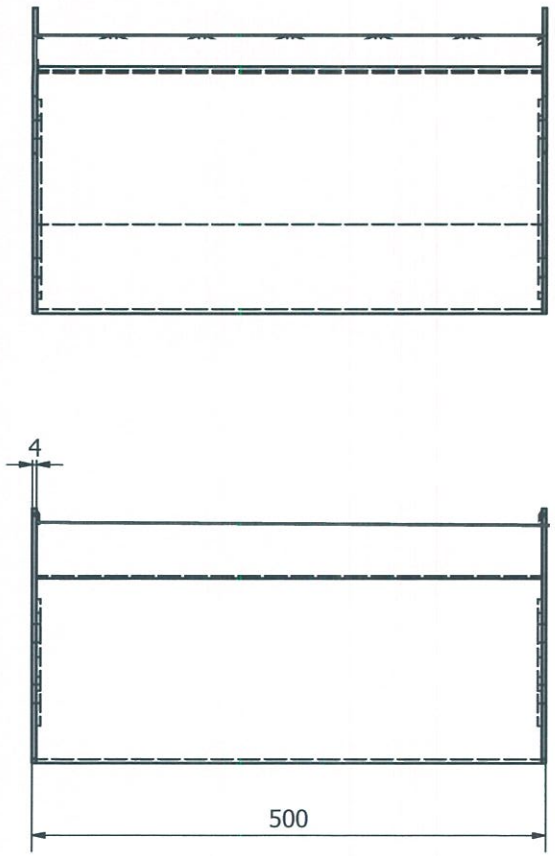

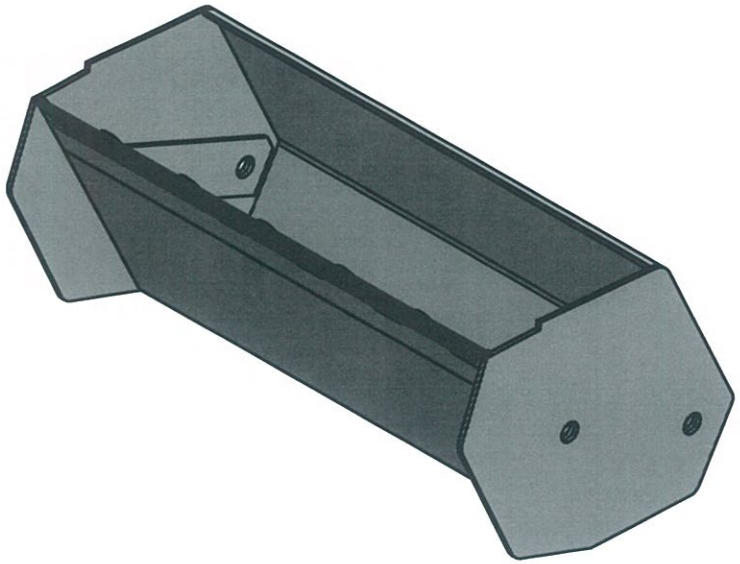

Flow Prosses							
PROSSES	Toll/MC	Flow	Flow	Prosses	Toll/MC	Flow	Flow
Cutting				Heat Treat			
Machining	BUBUT	1		Coating			
Roll				Painting			
Bending				Qc		2	
Welding				Logistic		3	

PROJ'	Designed by	Checked by	Approved by	Cust. Approve
SCALE				
-				

TITLE	Bucket Elevator			
DWG NO	Assembly Bucket Elevator			
Material 3CR12	Date 26/01/2017	Qty 30 unit	Edition 00	Sheet 1 / 1

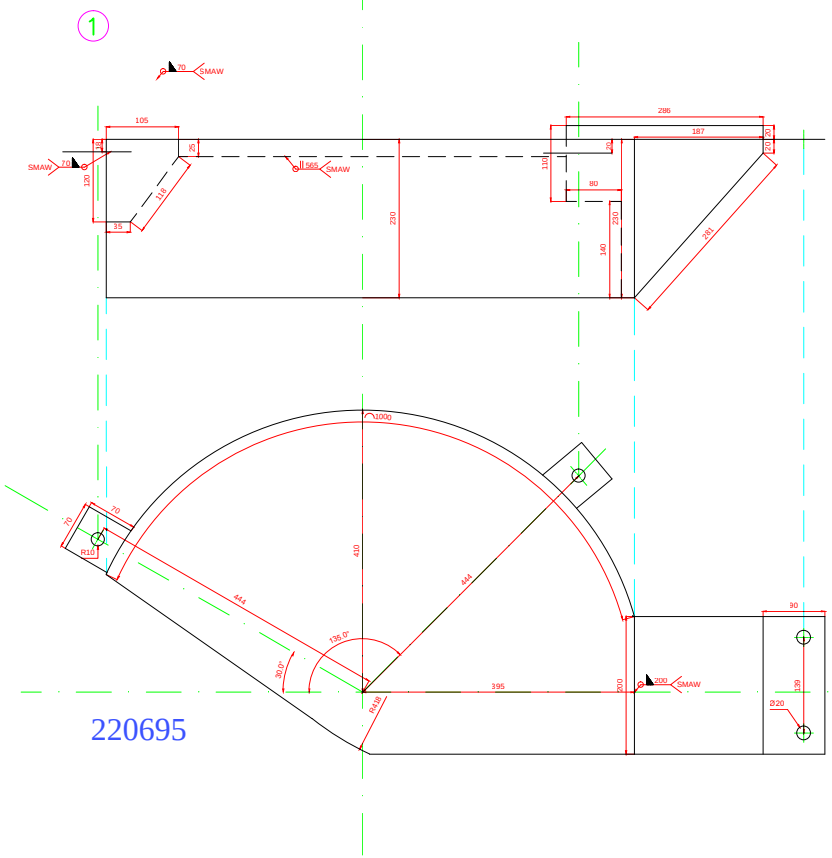

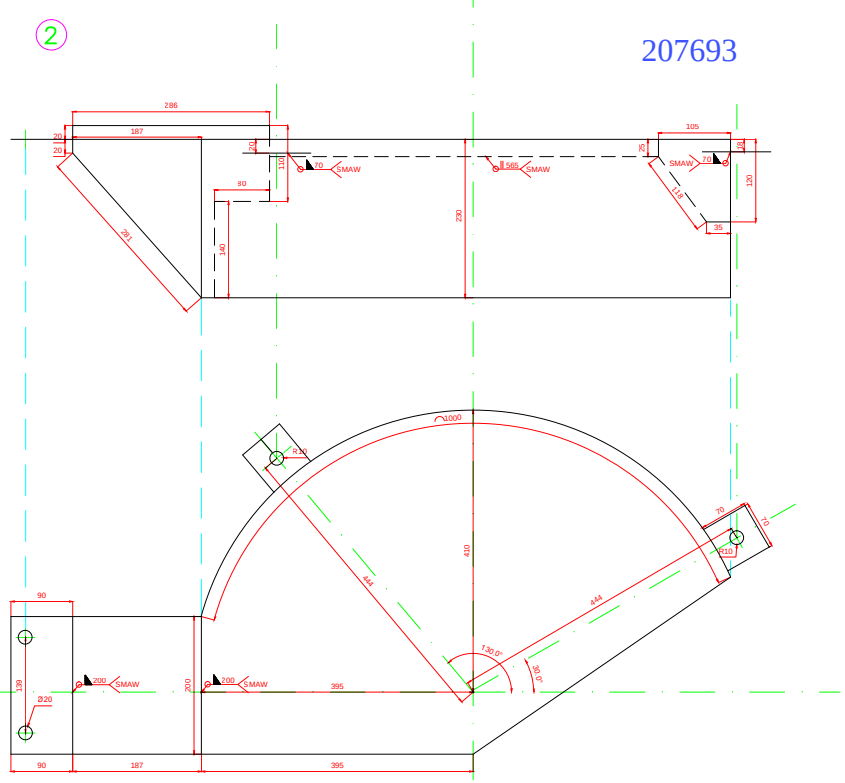

DRAWING INCLUDE THE INFORMATION ARE PT. KOMIPO PEMBANGKITAN JAWA BALI #3&4 ASSET

DO NOT SHARE OR USE FOR ANOTHER PURPOSE WITHOUT WRITTEN PERMISSION FROM PT. KOMIPO PEMBANGKITAN JAWA BALI #3&4

NO.	DESCRIPTION	QTY	UNIT	THICKNESS	MATERIAL
2.	LEFT MOUNTING (220695)	1	PC	5	SUS 304
1.	RIGHT MOUNTING (207693)	1	PC	5	SUS 304

LINEAR & GEOMETRY TOLERANCE ACCORDING ISO 2768 ✓m ✓✓ ✗✗✓

CASTING TOLERANCE ACCORDING ISO 8602

PT. KOMIPO PEMBANGKITAN JAWA BALI UNIT 3&4

APPROVED	BAE, HYENG SUB	TANJUNG JATI B EXPANSION 2 X 660 MW POWER PLANT	PROJECT
CHECKED	MOKHAMAD FAUJI	TITLE: DRAG CHAIN CONVEYOR OUTSIDE BEARING CHAIN ROLLER COVER	
DRAWN	TEDDY B. KENCONO		
SCALE			
DATE	OCTOBER 5, 2020	DRAWING NO.	Rev. 01

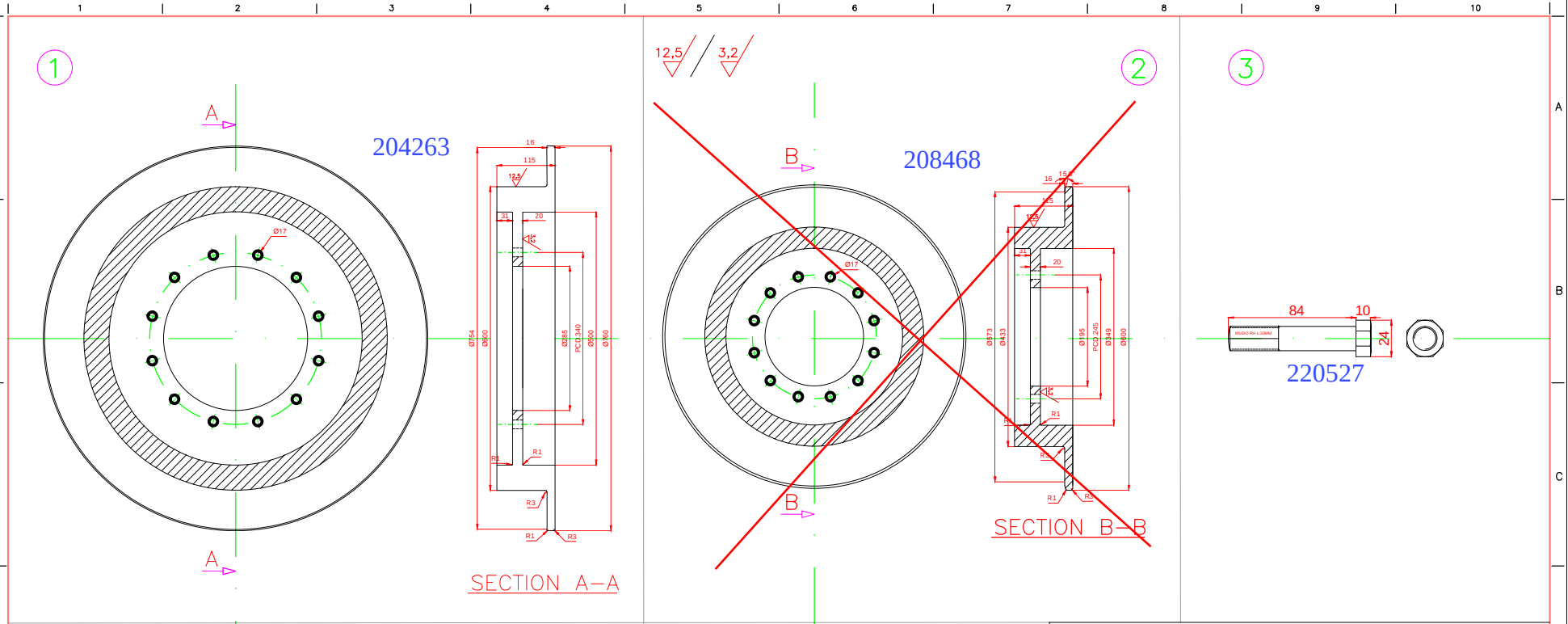

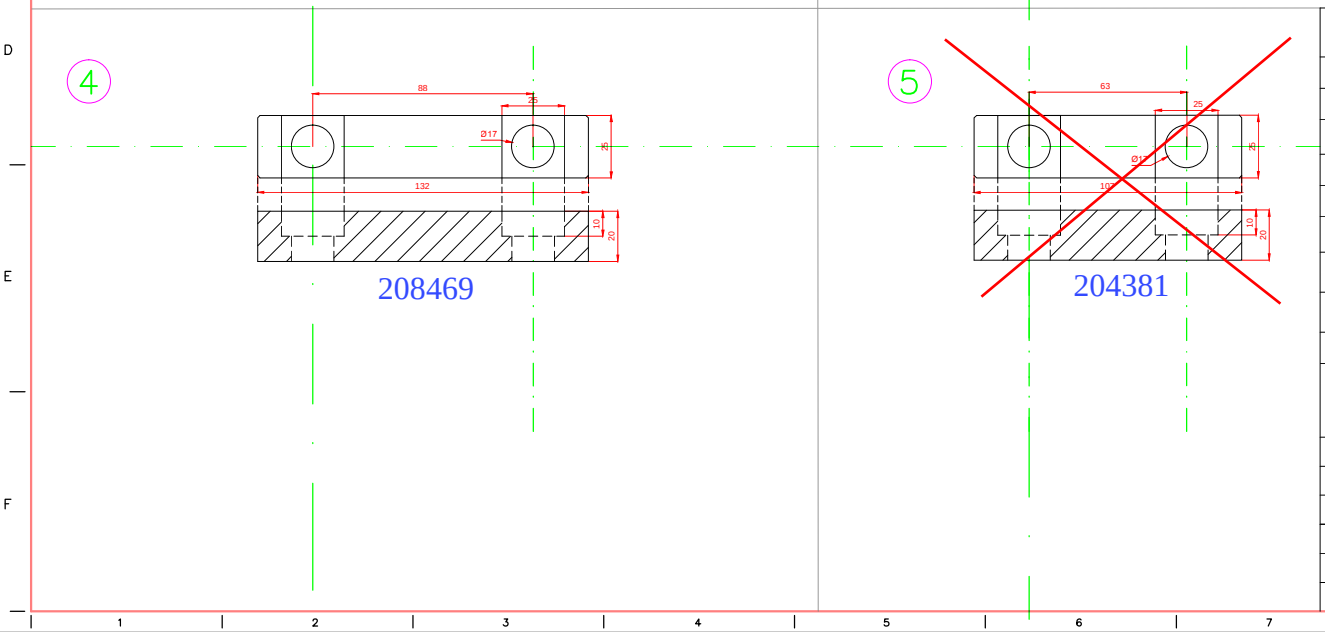

DRAWING INCLUDE THE INFORMATION ARE PT. KOMIPO PEMBANGKITAN JAWA BALI #3&4 ASSET

DO NOT SHARE OR USE FOR ANOTHER PURPOSE WITHOUT WRITTEN PERMISSION FROM PT. KOMIPO PEMBANGKITAN JAWA BALI #3&4

NO.	DESCRIPTION	QTY	UNIT	MATERIAL
5.	LOCKING PLATE CTC.63	12	PC	SUS 304
4.	LOCKING PLATE CTC.88	36	PC	SUS 304
3.	HEXAGON BOLT HALF-THREAD M16X2 RH L: 91MM	96	PC	SUS 420
2.	CHAIN ROLLER PCD.245	2	PC	SUS 420
1.	CHAIN ROLLER PCD.340	6	PC	SUS 420

THE CHAIN ROLLERS SHOULD BE PAINTING WITH MARINE COATING (RAL#7035)

LINEAR & GEOMETRY TOLERANCE ACCORDING ISO 2768

CASTING TOLERANCE ACCORDING ISO 8602

PT. KOMIPO PEMBANGKITAN JAWA BALI UNIT 3&4

APPROVED	BAE, HYENG SUB	TANJUNG JATI B EXPANSION 2 X 660 MW POWER PLANT	PROJECT
CHECKED	MOKHAMAD FAUJI	TITLE: DRAG CHAIN CONVEYOR CHAIN ROLLERS	
DRAWN	TEDDY B. KENCONO		
SCALE	1:1		
UNIT	MM		
DATE	JUNE 18, 2020	DRAWING NO. KPJB-BAD-CV-005	Rev. 01

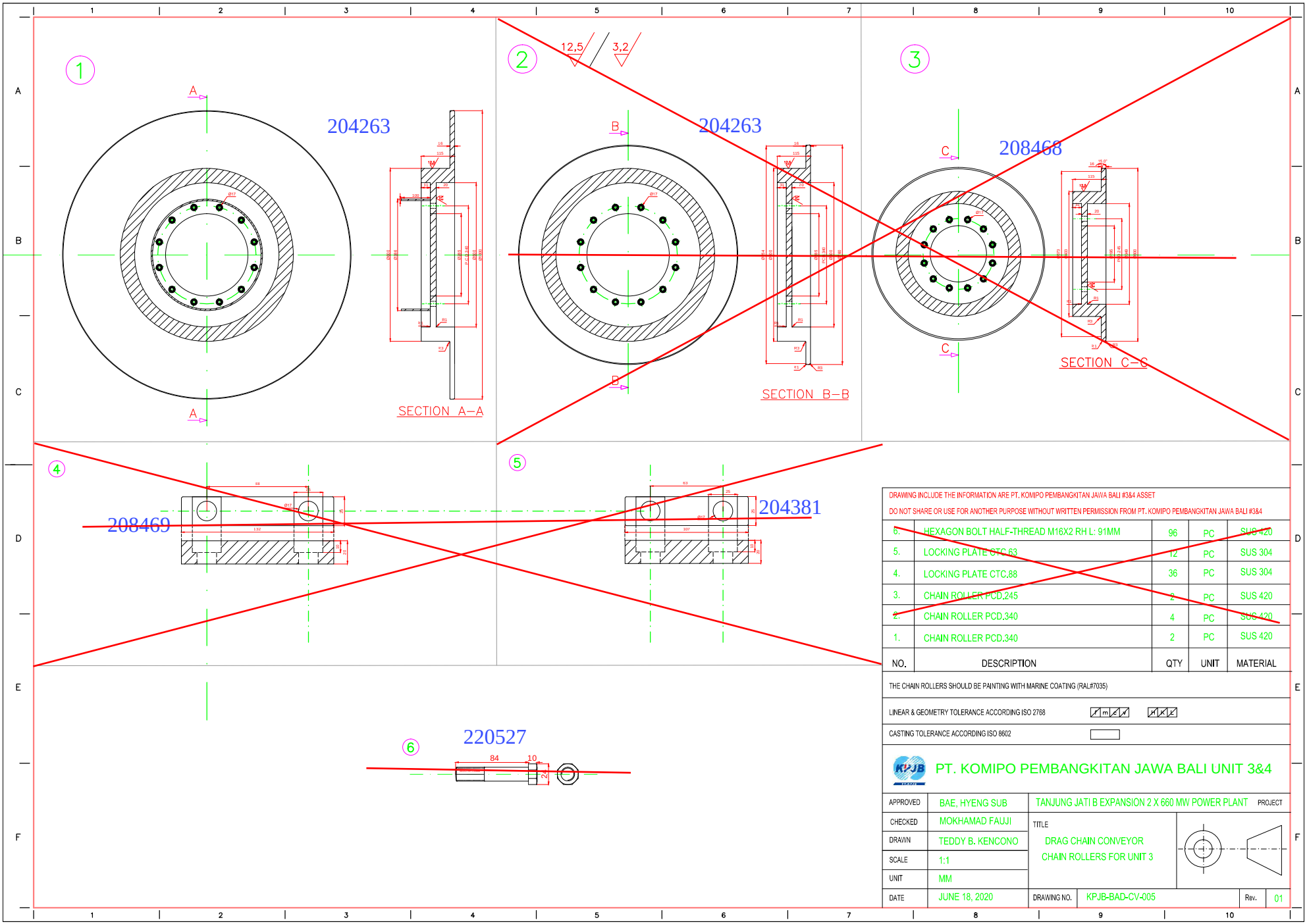

DRAWING INCLUDE THE INFORMATION ARE PT. KOMIPO PEMBANGKITAN JAWA BALI #3&4 ASSET
DO NOT SHARE OR USE FOR ANOTHER PURPOSE WITHOUT WRITTEN PERMISSION FROM PT. KOMIPO PEMBANGKITAN JAWA BALI #3&4

NO.	DESCRIPTION	QTY	UNIT	MATERIAL
6.	HEXAGON BOLT HALF-THREAD M16X2 RH L: 91MM	96	PC	SUS 420
5.	LOCKING PLATE CTC.63	12	PC	SUS 304
4.	LOCKING PLATE CTC.88	36	PC	SUS 304
3.	CHAIN ROLLER PCD.245	2	PC	SUS 420
2.	CHAIN ROLLER PCD.340	4	PC	SUS 420
1.	CHAIN ROLLER PCD.340	2	PC	SUS 420

THE CHAIN ROLLERS SHOULD BE PAINTING WITH MARINE COATING (RAL#7035)

LINEAR & GEOMETRY TOLERANCE ACCORDING ISO 2768

CASTING TOLERANCE ACCORDING ISO 8602

PT. KOMIPO PEMBANGKITAN JAWA BALI UNIT 3&4

APPROVED	BAE, HYENG SUB	TANJUNG JATI B EXPANSION 2 X 660 MW POWER PLANT	PROJECT
CHECKED	MOKHAMAD FAUJI	TITLE	
DRAWN	TEDDY B. KENCONO	DRAG CHAIN CONVEYOR	
SCALE	1:1	CHAIN ROLLERS FOR UNIT 3	
UNIT	MM		
DATE	JUNE 18, 2020	DRAWING NO. KPJB-BAD-CV-005	Rev. 01