Public Notice
U4POB The Purchasing of HP and LP Bypass Valve

1. **Scope of Supply**

   U4POB The Purchasing of HP and LP Bypass Valve

2. **Bidding Type**
   - Domestic open bidding to select the lowest priced suppliers and evaluated by total price
   - This bidding is conducted under one stage two cover bidding procedure (1 envelope for unprice document, administration requirements and technical requirements and 1 envelope of price document for the vendor who can pass the qualification).

3. **Requirement for Qualification of Bidder**
   It is mentioned in document of INVITATION TO BID, Bidding Schedule of U4POB The Purchasing of HP and LP Bypass Valve, Section 1.2.1.

4. Bid Closing date and Time on 11.00 WIB, **July 17, 2025**.

5. **Invitation to Bid (ITB) and Additional Information**
   - Invitation to Bid (ITB) document copy or soft file is available in website PT. KPJB (www.kpjb.co.id); or
   - Email : procurement34@kpjb.co.id or ulfa.lutfiana@kpjb.co.id

6. **Bid submission**
   To : Ulfa Nikmatul Lutfiana
   Finance & Administration Division (K19213)
   PT. Komipo Pembangkitan Jawa Bali (KPJB)
   PLTU Tanjung Jati B Unit 3 & 4,
   Desa Tubanan, Kecamatan Kembang,
   Kabupaten Jepara, Jawa Tengah, Indonesia 59475
   Tel : 0291-4270493, Fax : 0291-4270601

7. **Procedure for Submission Bid Document**
   - The bidding document shall be submitted in a sealed envelope by registered mail or direct submission after KPJB security's check not later than the bid closing date and time.
   - Document title shall be marked in the envelope as "U4POB The Purchasing of HP and LP Bypass Valve"

PLTU Tanjung Jati B Unit 3 & 4
Desa Tubanan Kecamatan Kembang
Kabupaten Jepara Jawa Tengah
Indonesia 59475
Tel: 0291-427-0491 Fax: 0291-427-0601

Bidding Schedule of U4POB The Purchasing of HP and LP Bypass Valve

Target dates	Description
July 10, 2025	✓ Approval for Procurement Plan including ITB
July 11, 2025	✓ Public Notice for Bidding through KPJB website (www.kpjb.co.id)
July 17, 2025 (11.00 WIB)	✓ Bid document submission closing ✓ Receive bidding document and open bidding document

	PT. KOMIPO PEMBANGKITAN JAWA BALI	Doc. Ref	: KPJB-0951-02
	PLTU TANJUNG JATI B #UNIT 3&4	Form No.	: KPJB-0951-02-ZZ-FM-03
	REQUEST FOR QUOTATION	Design Div.	:Finance and Administration
		Revision No.	:00

Date	RFQ No:	PRF No:
July 10, 2025	K19213 R01	K19213
SUBJECT : (Requotation) U4POB The Purchasing of HP and LP Bypass Valve		

KPJB on behalf of PT. PLN hereby request your quotation for material/services below :

No	Item Code	Description	Quantity		Remark
			Qty	Unit	
		As per the attachment			

- The quotation shall be submitted in one sealed envelope containing both the priced and unpriced proposals, addressed to Procurement Team, F&A Division PT. KPJB. The original documents should be received by KPJB not later than 11.00 WIB date 17 JUL 2025 by registered mail or direct submission after PLTU Tanjung Jati B security check and registration.
- Validity of Quotation price should be minimum 3 months.
- Prices and detailed information should be specified about the materials and services in the quotation by strictly following the quotation form attached hereto.
- Payment will be made by Telegraphic Transfer (T/T) within forty five (45) days after invoice received, attached with delivery or work completion report (Invoice, Good receive form, MOV, BAPP, etc.) issued by PT. KPJB.
- Performance Bond is applicable for PO ≥IDR 500.000.000: minimum 5% from PO price including VAT. Validity of Bank Guarantee is covering delivery period + 130 calendar days.
- Warranty period is 12 months (365 calendar days).
- **Delivery time: not later than April 1, 2026.**
- **Delivery should be completed to PT. KPJB's warehouse, PLTU Tanjung Jati B Unit #3&4.**
- **Original Certificate should be submitted at the delivery time:**
  - **Original Certificate of Origin (issued by the chambers of commerce)**
  - **Original Certificate of Manufacture (issued by manufacturer)**

  are required at the delivery time.
- Warranty letter that state "The material is genuine, no defect, new and can be used properly" should be submitted at the time of delivery.
- All documents and communications shall be in English.
- All terms and conditions of this contract must be subject to and governed by PT. KPJB's Terms and Conditions for Contract attached hereto.
- In case of hazardous material, Material Safety Data Sheets (MSDS) and other related document for hazardous material shall be submitted at the time of delivery.
- For hand powered tools / powered tools: must be attached with tools certificate from manufacturer.
- For chemicals: All material delivery must be completed with symbol & label as required on regulation in every containers/other packaging.
- For service: All personnel must have appropriate certification as required on local HSE Regulation.

Sincerely Yours,

Hendang Suroso
F&A. Manager

Date

Attachment :

1. Material list
2. Quotation format
3. Unprice document required
4. Pakta Integritas Form
5. Surat Pernyataan Keaslian Dokumen Form
6. KPJB Contractor Safety Rules
7. PT. KPJB's General Terms and Conditions for Contract
8. Term of Reference
9. Drawing
10. DPJT list and Bid Bond format

	PT. KOMIPO PEMBANGKITAN JAWA BALI	Doc. Ref	: KPJB-0951-02
	PLTU TANJUNG JATI B #UNIT 3&4	Form No.	: KPJB-0951-02-ZZ-FM-03
	REQUEST FOR QUOTATION	Design Div.	:Finance and Administration
		Revision No.	:00

Attachment 1: RFQ No. K19213

MATERIAL LIST

Item No	Item Code	Description	Quantity	
			Order	Unit
1	208276/	GASKET SPIRAL WOUND, PART. NO : 000003112570, DWG. POS NO: 34, EQUIPMENT; HP BYPASS VALVE, DRAWING: 202418-1CH, MODEL: DRE 180 C, MFG: IMI CCI	1,00	PC
2	208277/	GASKET SPIRAL WOUND, PART. NO :000003112576, DWG. POS NO: 35, EQUIPMENT; HP BYPASS VALVE, DRAWING: 202418-1CH, MODEL: DRE 180 C, MFG: IMI CCI	2,00	PC
3	208278/	PACKING,PREFORMED, RING, PART. NO : 000003158435, DWG. POS NO: 36, EQUIPMENT; HP BYPASS VALVE, DRAWING: 202418-1CH, MODEL: DRE 180 C, MFG: IMI CCI	4,00	PC
4	223338/	HOSE,METALLIC, FLEXIBLE HOSE FOR HP BYPASS VALVE, PART NO. 000.101.006.197, MFG. CCI	2,00	PC
5	215208/	PACKING SPACER, PART NO. : 320401095, DWG. POS NO: 15, EQUIPMENT; LP BYPASS VALVE A/B, DRAWING: 202418-7CH, MODEL NO: NBSE 60-700-2, MFG: IMI CCI	2,00	PC
6	208287/	PACKING,PREFORMED, RING, PART. NO : 000003158910, DWG. POS NO: 34, EQUIPMENT; LP BYPASS VALVE A/B, DRAWING: 202418-7CH, MODEL NO: NBSE 60-700-2, MFG: IMI CCI	2,00	PC
7	208288/	PACKING,PREFORMED, RING, PART. NO : 255670111, DWG. POS NO: 35, EQUIPMENT; LP BYPASS VALVE A/B, DRAWING: 202418-7CH, MODEL NO: NBSE 60-700-2, MFG: IMI CCI	2,00	PC
8	208289/	PACKING,PREFORMED, RING, PART NO : 036, EQUIPMENT : LP TURBINE BYPASS VALVE, DRAWING NO : D A1 202418-7CH, ASSEMBLY DRAWING NO : 103.233.844.500	2,00	PC
9	221483/	CONNECTOR,HOSE, ND 10, 000003195560, HYDRAULIC POWER UNIT HV 200	2,00	PC
10	207216/	CONNECTOR,HOSE, FLEXIBLE HOSE, DN 16X2000, PART. NO: 000101006118, EQUIPMENT; HP & LP BYPASS VALVE SPRAY CV INLET ISOLASTION VALVE, MFG: IMI CCI, p/n 6,7,8, Hydraullic Power Unit HV200	6,00	PC
11	107278/	PARTS KIT, SOFT GOODS KIT, REF NO: 2KT115946_034~035, BRAND: IMI CCI	1,00	SET
12	107272/	PARTS KIT, SOFT GOODS KIT, REF NO: 2KT116190_34, 36, 37, BRAND: IMI CCI	1,00	SET

Attachment 2: RFQ No. K19213
Quotation format
A. Price Quotation

<COMPANY LOGO>

Quotation

No:

Item No	Item Code	Description	Quantity		Price (IDR)	
			Order	Unit	Unit Price	Total
1	208276/	GASKET SPIRAL WOUND, PART. NO : 000003112570, DWG. POS NO: 34, EQUIPMENT; HP BYPASS VALVE, DRAWING: 202418-1CH, MODEL: DRE 180 C, MFG: IMI CCI	1,00	PC		
2	208277/	GASKET SPIRAL WOUND, PART. NO :000003112576, DWG. POS NO: 35, EQUIPMENT; HP BYPASS VALVE, DRAWING: 202418-1CH, MODEL: DRE 180 C, MFG: IMI CCI	2,00	PC		
3	208278/	PACKING,PREFORMED, RING, PART. NO : 000003158435, DWG. POS NO: 36, EQUIPMENT; HP BYPASS VALVE, DRAWING: 202418-1CH, MODEL: DRE 180 C, MFG: IMI CCI	4,00	PC		
4	223338/	HOSE,METALLIC, FLEXIBLE HOSE FOR HP BYPASS VALVE, PART NO. 000.101.006.197, MFG. CCI	2,00	PC		
5	215208/	PACKING SPACER, PART NO. : 320401095, DWG. POS NO: 15, EQUIPMENT; LP BYPASS VALVE A/B, DRAWING: 202418-7CH, MODEL NO: NBSE 60-700-2, MFG: IMI CCI	2,00	PC		
6	208287/	PACKING,PREFORMED, RING, PART. NO : 000003158910, DWG. POS NO: 34, EQUIPMENT; LP BYPASS VALVE A/B, DRAWING: 202418-7CH, MODEL NO: NBSE 60-700-2, MFG: IMI CCI	2,00	PC		
7	208288/	PACKING,PREFORMED, RING, PART. NO : 255670111, DWG. POS NO: 35, EQUIPMENT; LP BYPASS VALVE A/B, DRAWING: 202418-7CH, MODEL NO: NBSE 60-700-2, MFG: IMI CCI	2,00	PC		
8	208289/	PACKING,PREFORMED, RING, PART NO : 036, EQUIPMENT : LP TURBINE BYPASS VALVE, DRAWING NO : D A1 202418-7CH, ASSEMBLY DRAWING NO : 103.233.844.500	2,00	PC		
9	221483/	CONNECTOR,HOSE, ND 10, 000003195560, HYDRAULIC POWER UNIT HV 200	2,00	PC		
10	207216/	CONNECTOR,HOSE, FLEXIBLE HOSE, DN 16X2000, PART. NO: 000101006118, EQUIPMENT; HP & LP BYPASS VALVE SPRAY CV INLET ISOLASTION VALVE, MFG: IMI CCI, p/n 6,7,8, Hydraullic Power Unit HV200	6,00	PC		
11	107278/	PARTS KIT, SOFT GOODS KIT, REF NO: 2KT115946_034~035, BRAND: IMI CCI	1,00	SET		
12	107272/	PARTS KIT, SOFT GOODS KIT, REF NO: 2KT116190_34, 36, 37, BRAND: IMI CCI	1,00	SET		
		TOTAL				
		VAT				
		GRAND TOTAL				

Term and Conditions:

1. The above price are included delivery cost to warehouse of PT. KPJB
2. Please mention Certificate is required at the delivery time
3. Payment will be made by Telegraphic Transfer (T/T) within forty five (45) days after invoice received, attached with delivery or work completion report issued by PT.KPJB.
4. Please mention Bank Account that will be use for payment (including Bank Name, Bank Address)
5. Please mention Name of Director

Place, [Month] [Date] [Year]
SIGN & COMPANY STAMP
DUTY STAMP / MATERAI (10000)
Name
(Title)

B. Unpriced Quotation

<COMPANY LOGO>

Quotation

No:

Item No	Item Code	Description	Quantity		Delivery Time
			Order	Unit	
1	208276/	GASKET SPIRAL WOUND, PART. NO : 000003112570, DWG. POS NO: 34, EQUIPMENT; HP BYPASS VALVE, DRAWING: 202418-1CH, MODEL: DRE 180 C, MFG: IMI CCI	1,00	PC	**not later than April 1, 2026**
2	208277/	GASKET SPIRAL WOUND, PART. NO :000003112576, DWG. POS NO: 35, EQUIPMENT; HP BYPASS VALVE, DRAWING: 202418-1CH, MODEL: DRE 180 C, MFG: IMI CCI	2,00	PC	
3	208278/	PACKING,PREFORMED, RING, PART. NO : 000003158435, DWG. POS NO: 36, EQUIPMENT; HP BYPASS VALVE, DRAWING: 202418-1CH, MODEL: DRE 180 C, MFG: IMI CCI	4,00	PC	
4	223338/	HOSE,METALLIC, FLEXIBLE HOSE FOR HP BYPASS VALVE, PART NO. 000.101.006.197, MFG. CCI	2,00	PC	
5	215208/	PACKING SPACER, PART NO. : 320401095, DWG. POS NO: 15, EQUIPMENT; LP BYPASS VALVE A/B, DRAWING: 202418-7CH, MODEL NO: NBSE 60-700-2, MFG: IMI CCI	2,00	PC	
6	208287/	PACKING,PREFORMED, RING, PART. NO : 000003158910, DWG. POS NO: 34, EQUIPMENT; LP BYPASS VALVE A/B, DRAWING: 202418-7CH, MODEL NO: NBSE 60-700-2, MFG: IMI CCI	2,00	PC	
7	208288/	PACKING,PREFORMED, RING, PART. NO : 255670111, DWG. POS NO: 35, EQUIPMENT; LP BYPASS VALVE A/B, DRAWING: 202418-7CH, MODEL NO: NBSE 60-700-2, MFG: IMI CCI	2,00	PC	
8	208289/	PACKING,PREFORMED, RING, PART NO : 036, EQUIPMENT : LP TURBINE BYPASS VALVE, DRAWING NO : D A1 202418-7CH, ASSEMBLY DRAWING NO : 103.233.844.500	2,00	PC	
9	221483/	CONNECTOR,HOSE, ND 10, 000003195560, HYDRAULIC POWER UNIT HV 200	2,00	PC	
10	207216/	CONNECTOR,HOSE, FLEXIBLE HOSE, DN 16X2000, PART. NO: 000101006118, EQUIPMENT; HP & LP BYPASS VALVE SPRAY CV INLET ISOLASTION VALVE, MFG: IMI CCI, p/n 6,7,8, Hydraullic Power Unit HV200	6,00	PC	
11	107278/	PARTS KIT, SOFT GOODS KIT, REF NO: 2KT115946_034~035, BRAND: IMI CCI	1,00	SET	
12	107272/	PARTS KIT, SOFT GOODS KIT, REF NO: 2KT116190_34, 36, 37, BRAND: IMI CCI	1,00	SET	

Term and Conditions:

1. The above price are included delivery cost to warehouse of PT. KPJB
2. Please mention Certificate is required at the delivery time
3. Payment will be made by Telegraphic Transfer (T/T) within forty five (45) days after invoice received, attached with delivery or work completion report issued by PT.KPJB.
4. Please mention Bank Account that will be use for payment (including Bank Name, Bank Address)
5. Please mention Name of Director

Place, [Month] [Date] [Year]
SIGN & COMPANY STAMP

Name
(Title)

Attachment 3: RFQ No. K19213

Unprice Document Required

No.	Syarat Administrasi (Administration Requirement)
A.	
1	Asli Surat Penawaran (Original Unprice quotation) yang:
	1. Description sesuai permintaan
	2. Bertanggal (dated)
	3. Bertanda tangan dan Cap Perusahaan (Company stamped)
	4. Menyebutkan waktu pengiriman sampai gudang sesuai permintaan (Time Delivery)
2	Pengalaman Pekerjaan dengan total harga kontrak senilai minimal IDR 240.000.000 – **menyerahkan copy kontrak atau PO** (Work Experience for contract amount minimum IDR 240.000.000 – **submitting the copy of the contract or PO)**
3	Copy pembayaran pajak SSP (PPN) 3 bulan terakhir periode: Maret, April, Mei 2025 (Copy of last 3 month payment tax or period of: March, April, May 2025)
4	Copy of financial report audited by public accountant minimum year of 2023. Fotokopi laporan keuangan teraudit oleh Kantor Akuntan Publik minimum tahun 2023
5	Copy of SPT Tahunan year of 2023
6	Original Pakta Integritas
7	Surat Pernyataan Keaslian Dokumen
8	Original Bid bond 1% up to 3% from price quotation (including VAT) with the validity until 10 OCT 2025. - Bid bond should be issued by Bank based on DPJT list and format issued by PLN - Beneficiary of Bid bond to: PT. Perusahaan Listrik Negara (Persero) UIK Tanjung Jati B Desa Tubanan, Kecamatan Kembang, Jepara Jaminan Penawaran asli 1% sampai dengan 3% dari Penawaran Harga (termasuk PPn) dengan validitas sampai dengan 10 OCT 2025.
9	Vendor participant must have registered CSMS Certificate (minimum : Low Risk Level) issued by PT. PLN (Persero) - submitting the copy of the document
10	Vendor participant must have Agent - submitting the copy of the document
B.	
1	Copy Surat Ijin Usaha Perusahaan – SIUP / BKPM (PMA) (copy of Business License)
2	Copy Surat Ijin Tempat Usaha – SITU / DOMISILI / HO (Copy of Domicile Certrificate)
3	Copy Nomor Pokok Wajib Pajak - NPWP (Copy Tax ID number of company)
4	Copy Surat Pengukuhan Perusahaan Kena Pajak - SPPKP (Copy of Taxable Company Certificate)
5	Copy Tanda Daftar Perusahaan – TDP / NIB (Copy of Certificate Company Regristration)
6	Copy Akte pendirian perusahaan/perubahan *jika ada (Deed of Incorporation)

Note: <u>Administration Requirement point B 1-6 is not required to be submitted if your company already registered in our SAP and the Company data submitted still valid until closing time.</u> If any document not submitted by the suppliers or the submitted document do not meet the requirement, we will regard that the supplier fails and we will not open the price quotation document (price evaluation)

Catatan: Syarat Administrasi no. B 1-6 tidak perlu di kirimkan jika perusahaan anda sudah terdaftar di SAP kami dan data yang dahulu di kirimkan masih berlaku sampai dengan waktu penutupan bidding. Jika ada

dokumen yang tidak diserahkan atau dokumen yang diserahkan tidak sesuai dengan persyaratan, kami akan menganggap bahwa supplier gagal dan kami tidak akan membuka dokumen penawaran harga (evaluasi harga).

Attachment 4: RFQ No. K19213

(KOP PERUSAHAAN/BADAN/LEMBAGA)

PAKTA INTEGRITAS

Saya yang bertanda tangan di bawah ini, dalam rangka Pengadaan ..... (*diisi Nama Pengadaan*) dengan nomor ..... (*diisi nomor RFQ/PR*), pada satuan kerja PT KPJB yang dalam hal ini mewakili PT PLN (Persero) Unit Induk Pembangkitan Tanjung Jati B Jepara dengan ini menyatakan bahwa saya:

1. Akan mentaati peraturan tentang Pedoman Pengadaaan Barang/Jasa di Lingkungan PT KPJB dan PT PLN (Persero), dan peraturan perundang-undangan yang terkait dengan pengadaan;
2. Tidak akan melakukan persengkokolan/pengaturan/kerjasama diantara para Peserta Pengadaan/Jasa lain dan/atau Pengguna Barang/Jasa dan/atau Pelaksana Pengadaan yang dapat mengakibatkan terjadinya persaingan usaha tidak sehat;
3. Mendukung prinsip **4 NO's** yang dijunjung tinggi oleh PT KPJB dan PT PLN (Persero) yaitu:
   a. ***No Bribery*** (tidak boleh ada suap menyuap dan pemerasan)
   b. ***No Kickback*** (tidak boleh ada komisi, tanda terimakasih baik dalam bentuk uang dan dalam bentuk lainnya);
   c. ***No Gift*** (tidak boleh ada hadiah atau gratifikasi yang bertentangan dengan peraturan
   d. ***No Luxirious Hospitality*** (tidak boleh ada penyambutan dan jamuan yang berlebihan).
4. Tidak akan melakukan komunikasi yang mengarah dan/atau melakukan praktek Korupsi, Kolusi dan Nepotisme (KKN)
5. Akan melakukan proses pengadaan secara bersih dan transparan agar menghasilkan pekerjaan sesuai ketentuan peraturan perundang-undangan yang berlaku.

Apabila saya melanggar hal-hal yangtelah saya nyatakan dalam Pakta Integritas ini, saya bersedia dikenakan sanksi sesuai dengan ketentuan peraturan perundang-undangan yang berlaku.

_____[*Tempat*], _____ [*Tanggal*]

[*Tanda Tangan & Cap Perusahaan & Materai 10.000*]

_____ [*Nama Jelas*]

_____ [*Jabatan*]

Attachment 5: RFQ No. K19213

(KOP PERUSAHAAN/BADAN/LEMBAGA)

SURAT PERNYATAAN KEASLIAN DOKUMEN

Yang bertanda tangan di bawah ini :

Nama :

Jabatan :

Alamat :

Sehubungan dengan pekerjaan :

Judul Pekerjaan :

RFQ No. :

Menyatakan dengan sesungguhnya bahwa segala dokumen yang kami sampaikan adalah benar dan apabila dikemudian hari ditemukan bahwa dokumen – dokumen yang telah kami sampaikan tidak benar dan ada pemalsuan, maka kami bersedia dikenakan sanksi sesuai peraturan perundang – undangan yang berlaku.

_____[*Tempat*], _____ [*Tanggal*]

[*Tanda Tangan & Cap Perusahaan & Materai 10.000*]

_____ [*Nama Jelas*]

_____ [*Jabatan*]

Attachment 6 : RFQ No. K19213

KPJB CONTRACTOR SAFETY RULES — **Revision 00**

ATURAN KESELAMATAN KERJA KONTRAKTOR KPJB — **06 – 03 - 2020**

1. **CONTRACTOR SAFETY PLAN**

Prior to beginning work, Contractor shall prepare and submit Contractor's Health and Safety Plan to HSE of KPJB according to Site Safety Rule and KPJB Policies. Contractor shall submit the following requirements:

2.1. Copy of signed PO/Work Order/Appointment Letter.

2.2. Company Permit or License by Government.
For special work (such as: underwater, radiography), contractor shall be completed with valid Company Permit or License by Government.

2.3. Work Instruction/Standard Operating Procedure (SOP).

2.4. Contractor should prepare work instruction or SOP which are detailed steps of how to conduct a specific job task and approved by KPJB Engineer's Representative.

2.5. Organization Chart.
Contractor should prepare Organization Chart including contact number of related personnel involved on project.

2.6. Schedule of Project.
Contractor should prepare work schedule approved by KPJB's Engineer Representative. In case there are any changes, updated schedule should be submitted.

2.7. List of Manpower.
- The contractor attaches list of workers and copy of workers' ID involved on the project (KTP/SIM). Copy of Passport, Working Visa for Expatriate workers.
- Minimum age of worker is 17 years old.
- SKCK (Police record) is required during Maintenance and Planned Outage of KPJB.

2.8. Health Statement Letter.
Hospital Record/Health Statement Letter from Hospital or *Puskesmas* is required for all involved workers; with statement letter's minimum validity is 1 (one) month.

2.9. Insurance.
All workers must be protected by insurance, at least BPJS *Ketenagakerjaan* and/or BPJS *Jasa Konstruksi* for certain time and specific work contract, complete with its payment evidence.

2.10. Personnel Competency and Certification.
Copy of workers' certificate shall be attached in accordance with the provisions.
- Driver License: SIM A, B, C.
- Operator License: forklift, lifting, gondola, rigger, crane, radiography.
- Welder.
- Scaffolding technician/operator and supervisor.

2.11. List of PPE, Tools and Emergency Equipment.
- Contractor is required to identify and prepare appropriate PPE. PPE must be in accordance with applicable standards and conditions in KPJB.
- Contractor shall provide safe and feasible tools and equipment's based on contract and scope of work.
- Contractor shall provide safety line/barricade, and safety sign refer to hazard identification.
- Contractor shall prepare emergency equipment to assist handling in certain conditions, i.e.: first aid box and initial fire handling, and so on.

2.12. Drawing / P & ID Diagram.
Contractor shall prepare project drawings or equipment's which have been approved by KPJB's Engineer Representative.

2.13. Risk Assessment.
Contractor shall conduct risk assessment and specific hazard control of conducted work in form of Job Safety Analysis (JSA). This document shall be approved by KPJB Engineer's Representative and HSE. JSA Document shall be informed to all involved workers.

2. **SAFETY INDUCTION**

2.1. Contractor shall ensure that all works have obtained KPJB's Safety Induction.

2.2. Safety Induction is conducted only after all Health and Safety Plan requirements have been fulfilled. Safety Induction is conducted based on designated schedule by KPJB's HSE.

2.3. Workers which have attended Safety Induction will get "Pass Safety Induction" sticker to easily identify.

3. **PERSONAL PROTECTIVE EQUIPMENT**

The contractor shall provide Personal Protective Equipment and long sleeve wear pack with contractor identification. Personal Protective Equipment shall be complying with relevant and applicable standards, including:

3.1. Safety helmets with chin strap, long sleeve wear pack/vests, safety shoes, and industrial safety glasses. Safety helmet color regulation in KPJB is:

Red	HSSE
Blue	Technical Advisor
Yellow	Contractor

3.2. Fall protection, safety body harness double hooks should be used for contractor's work in height risk or falling hazards area.

3.3. Other items of personal protective equipment shall be worn as required by risk assessment.

4. **SECURITY AND ACCESS CONTROL**

4.1. Enter and Exit access to Tanjung Jati B unit #3&4 Site is via Post Main Gate (PLN) and Security 2nd Gate (KPJB).

4.2. Contractors shall conduct registration for:

Yellow Visitor	Permitted only on Admin Building area;
Red Visitor	Permitted to enter site accompanied by KPJB's Employee (not permitted to conduct any works);
Workers' ID Card	Permitted to enter site and work according to approved PO

4.3. Enter and Exit is permitted only in Daily working hour (Monday to Friday from 07.30 until 16.30).

4.4. Contractor shall apply Notification of Overtime which approved and signed by PLN and KPJB for any works conducted outside daily working hours.

4.5. For works which conduct in 24 hours' time schedule, Contractors shall regulate it into shift work system.

4.6. Contractor is permitted to enter the site only if have fulfilled following items:
- In a good/healthy condition.
- Attended Safety Induction,
- Obtain and/or change over the ID,
- Wearing proper PPE,

4.7. In case that Contractor need to enter or passing other Units aside from KPJB, they need to inform KPJB's HSE Division and follow the applicable procedures.

4.8. All vehicles must meet the requirements of applicable State Laws concerning safe operation (i.e. driver license, brakes, lights, etc.).

4.9. All personal cars must be parked in designated parking area, which is PLN parking area.

4.10. Three wheels, pickup, and other such vehicles are prohibited from being used to transport of people.

4.11. All vehicles shall be driven at speeds not to exceed the posted speed limit (20 km/h).

4.12. All entry and exit material shall be carried to KPJB Procedure's KPJB-09S6-10 Security Procedure:
- All entry materials to KPJB should be completed with Delivery Instruction / PO / Delivery Order,
- All exit materials should be completed with Material Gate Pass,
- Documents and materials will be checked by Security Post Main Gate (PLN) and Security 2nd Gate (KPJB),
- Material entry and exit to/from KPJB should be on daily working hour Monday to Friday 08.00 until 15.00. In case material in/out is not in daily working hour, contractor should prepare notification.

4.13. Contractor shall be submissive and obedient to KPJB and PLN's applicable Security procedure.

4.14. Workers and Visitors are prohibited to carry or conduct: smoking, any weapons, narcotics and alcoholic beverages.

5. MECHANICAL & ELECTRICAL TOOLS

5.1. Contractor must ensure all tools and equipment's must be certified in good and safe condition. All safety devices are installed on all equipment's.

5.2. Contractor ensures equipment's operation shall be in accordance with manufacturer instructions.

5.3. Contractor ensures all broken equipment/tools are tagged or remove from working area so that it will not be used.

5.4. The Contractor's portable lights shall be not more than 50V and provided with transformers.

5.5. Portable Electric Tools and Equipment shall be double pole switched and generally shall be of Very Low Voltage type (less than 110V AC). Alternatively, if it is not possible for Portable Tools and Equipment to operate at Very Low Voltage and they are operated at 220-240V AC then protection by a Residual Current Device (RCD) shall be provided.

5.6. All portable tools and equipment utilized on outdoor construction / installation sites shall be protected by Residual Current Device (RCD).

5.7. RCD's shall be regularly tested to ensure correct operation and shall be provided with a test system for easy testing.

5.8. The Contractor's mechanical & electrical tools shall be registered to Engineer's Representative, and have passed a Portable Mechanical & Electric Tools Test and be suitably tagged before allowed to use on site refers to KPJB Procedures Mechanical Electrical Tools Inspection.

5.9. Installation of leads and cord shall be in proper installed to avoid tripping hazard and run over by vehicle/equipment.

5.10. Prohibited to use double adaptor/plug, piggyback adaptor, and non-industrial electric multi socket (without fuse protection).

5.11. Portable mechanical & electric tools test carried out by KPJB Mechanical & Electrical tools inspector and contractor engineer.

5.12. Portable electric panel distribution board must be equipped with RCD, waterproofing, industrial type plug socket, refers to Indonesian PUIL standard.

5.13. Electric Tools and Equipment that are not in use shall be unplugged and the cables tidied to ensure no tripping hazards.

5.14. If a fuse blows or an RDC is tripped, the Contractor's shall investigate the root cause and report the incident to the Engineer's Representative. If the problem is repeated, the Contractor's personnel shall cease work using the tools and equipment and Contractor's Supervisor shall request an electrician to attend and repair the fault.

5.15. The contractor shall ensure that all gas cylinders for cutting and welding are placed on rack and fitted with suitable Flashback Arresters.

5.16. Lifting tool and lifting tackle shall comply with Indonesian regulation in respect of the examination, test and maintenance record requirements.

6. SAFETY OFFICER / SAFETY MAN

6.1. Contractors are mandatory to appoint Safety Officer/Safety Man which responsible during

period of work to ensure all works are conducted safely and based on procedure. For specific work regulated as follows:

- One safety man for 20 employees is under the control of the contractor (either directly or as sub-contractors). This is also applies into multiples employees amount under control of the contractor.
- Working condition is conducted within 24 hours.
- Working condition which categorized as high risk work such as:
  - Confined space work;
  - Work on flammable area such as on Crusher, Tripper, H2 Plant, and Fuel Oil.
  - Work on hot and high pressure pipe.
  - Under water work.

6.2. The Safety Man / Safety Officer should be:

- Minimum certificated of *AK3 Umum*.
- Understand with the relevant safety, health and environment regulation in Power Plant or Similar Industry.
- Be capable of advising the contractor on the most appropriate control measures and systems of work in order to minimize risk.

7. GENERAL SITE SAFETY

7.1. Contractor is obligated to complete all Permits to Work (PTW) and Safety Permit Form.

7.2. Contractor is obliged to conduct briefing before start working. Risk and potential hazard on working area shall be informed to all workers during briefing session.

7.3. Contractor shall prepare barriers that prevent unauthorized personnel from entering the work site.

7.4. Contractors prepare sign, PPE instruction, and requirements needed to enter the work area.

7.5. Contractor shall ensure machines and equipment are operated only by those who have been authorized and trained.

7.6. Contractor must prepare safe and adequate lighting and ventilation at work site.

7.7. Contractor shall ensure work area clean, tidy and safe. Loose materials, rubbish, tools and equipment placed around the work site shall be kept to a minimum to reduce of hazards.

7.8. Contractor must protect the material/tools from falling while working at height and install warning signs.

7.9. Contractor must ensure no exposed holes be left unattended at any time unless a fence can be erected strong enough to prevent a person falling into the hole.

7.10. Contractor must ensure the walk way and stairways kept clean and free from obstructions. In addition, free access must always be maintained to safety showers, eyewash, and fire protection systems.

7.11. Contractor shall ensure all equipment's/tools shall be inspected periodically and maintained in proper working condition. Any defect must be tagged: "do not use" and remove from service.

7.12. Where the Contractor is required to perform welding, it is responsible for ensuring adequate screens are provided and maintained to protect passers-by from the electric arc and also from spatter produced by the welding process.

7.13. Contractor should equip fire extinguisher at work place as well as should training to easily utilize by any kind of contractor employees.

7.14. Contractor should thoroughly check and make a plan against any gas leakages before and after work prior to in connection with gas work, hermetical place work, welding work, to prevent fire from flammable hazard.

7.15. Contractor should not use firefighting system as any other purposes during work period, such as cleaning, etc.

7.16. KPJB does not permit the smoking of tobacco, in any form, by its workers, contractors in KPJB workplaces. Smoking permitted only in designated / permitted areas.

7.17. Prohibited to take picture and/or video without permission on work location. Picture and video only permitted only for work report.

7.18. Equipment and tools must be returned to their designated storage areas after use.

7.19. Contractor shall be responsible for any damage or loss of the TJB 3&4 asset that is caused by the Contractors, its personnel and its sub-contractors.

7.20. Contractor must complete the Safety Permit Form before performing high risk work, including:

- Confined Space Work
- Welding / Hot Work
- Work at Height
- Lifting Material
- Excavation Work
- Work Surface Water and Under Water
- Radiography
- Work with Chemical Hazard
- Work with Electrical Hazard

8. MATERIAL HANDLING AND STORAGE

8.1. Contractor has responsibility to ensure maximum safety in handling, moving, loading, and unloading materials.

8.2. Special lifting tools shall be operated by authorized as well as competence personnel and based on its function.

8.3. All materials stored in tiers shall be secured to prevent sliding, falling, or collapse.

8.4. Flammable and Combustible Materials shall be stored with due in regard to their fire characteristics. Flammable and combustible material shall only be stored in approved containers and in appropriate quantities for the job site use.

9. HAZARDOUS MATERIALS AND MATERIAL SAFETY DATA SHEETS (MSDS).

9.1. Contractor shall provide a Materials Safety Data Sheet (MSDS) for all chemicals, and lubricants that will be intend to use in the performance of work.

9.2. Contractor shall follow the requirements for storage, handling, and disposal of materials as set by the Engineer's Representative (Chemist/Warehouse/HSE) Division.

9.3. Contractor ensures all chemicals must be stored, labeled, covered or inside at all times in approved containers and labeled as to contents.

9.4. All contractor employees must use proper protective clothing and equipment to prevent contact with hazardous chemicals.

10. DISPOSAL OF HAZARDOUS AND NON-HAZARDOUS WASTE

10.1. Contractor shall be responsible for the correct disposal of all waste generated in undertaking the work.

10.2. Contractor shall analyze any waste generated by his work to identify and determine whether the waste is to be categorized as B3 or not, based on the B3 waste table listed in Government Regulation PP 101 of 2014 concerning B3 waste management.

10.3. Contractor shall handle all B3 class wastes in a proper way that shall not contaminate the environment refer to KPJB Waste Handling Procedure KPJB-0957-03 Waste Management (Hazardous and Non Hazardous) and shall be actively coordinate with Environment Engineers of KPJB HSE Division.

11. SAFETY AND ENVIRONMENT CLEARANCE

Work is considered complete only if contractors have fulfilled following items:

11.1. Conduct Safety Clearance including prepare OSH report covering PTW Clearance, total working hours and Unsafe/Near-miss/Injuries (If any).

11.2. Clean work area from residual work activity including dispose trash/waste accordance with KPJB's Procedure KPJB-0957-03 Waste Management.

11.3. All equipment's, materials and other facilities belong to Contractors shall be immediately removed from working site.

12. EMERGENCY CONDITION

In an emergency condition, the contractor must play an active role in handling the initial emergency condition to prevent greater damage to assets and prevent accidents or fatality in accordance with their capabilities. Steps that can be taken by the contractor include:

12.1. Immediately notify Central Control Room (Ext: 20000). Inform clearly:

- Reporter's identity,
- Location,
- Emergency condition (incident, fire, equipment failure, victims, etc.).

12.2. Contractor performs emergency handling if have ability and safe to do (activate fire alarm, initial fire extinguishing, basic first aid, etc.).

12.3. Contractor ensures their employee immediately go to the nearest assembly point, follow the sign or directive of evacuation officer.

12.4. Contractor ensures that their workers get adequate first aid if any of their workers have a work accident, and help refer them to the hospital if needed.

13. HEALTH, SAFETY AND ENVIRONMENT VIOLATION SANCTION

Sanctions will be given to Contractors who violate the regulation of Safety and Environment Procedure, during normal or emergency working activity in KPJB area. Sanction as follows:

13.1. Direct Warning (1st Warning).
Direct Warning & 1st warning letter is given to Contractor who violates Health, Safety and Environment regulation stated on KPJB Contractor Safety Rules.

13.2. 2nd Warning.
Official 2nd Warning Letter will be issued to Contractor in which during the same contract period, Contractors violate the regulation as stated on KPJB Contractor Safety Rules. Contractors also obliged to replace work supervisor and workers are given sanction and shall be put into blacklist workers/contractors and not allowed to conduct any works in KPJB area for 1 (one) Year.

13.3. 3rd Warning Letter and Black List
Third Warning Letter and Black List will be issued to contractors in which on the same contract period have conducted violation toward these regulations for the 3rd times and reinforced by valid violation evidences, KPJB will give sanction in form of Black List Contractors and not allowed to conduct any work/procurement of Service or Material in KPJB for 1 (one) Year.

14. ATTACHMENT

14.1. KPJB – 0956 – 05 – 10 – FM – 01 Checklist Contractor Document Requirement

Lampiran Point 3, Hasil Pembahasan

KATEGORI SERTIFIKAT			
No	Sertifikat Original	Sertifikat Elektronik (harus bisa di-trace)	Independent Lab Test
1	Tanda tangan, cap, atau label asli yang jelas dari penerbit dokumen	Barcode	Copy/ original
2	Ditulis, diketik, dicap oleh tangan penerbit dokumen, atau menyatakan bahwa itu asli	Digital sign	
3	Tanda tangan asli (basah), dengan cap/stempel perusahaan *"printed"*	Signature electronic/ digital sign	
4	Tanda tangan *"printed"*, dengan cap/stempel perusahaan asli (basah)	Tanda Tangan print, stamp print, ada link tracing	
5	Tanda tangan *"printed"*, stamp *"printed"*, cap/stempel perusahaan original asli (basah)		
6	Tanda tangan asli, stamp asli, tapi ada redaksi sertifikat copy (dupliclate, triplicate dst)		
7	Tanda tangan dengan stamp basah dan perforated (lubang-lubang kecil) nomer seri		
8	Tanda tangan asli		

- Sertifikat Electronic dianggap setara dengan sertifikat Original untuk keperluan verifikasi data
- Dokumen pendukung seperti MSDS, COA, dan Mill Certificate dapat diterima dalam bentuk salinan (tidak perlu mencantumkan kata "copy" pada PO)

TERMS AND CONDITION
Lampiran

PO NO : **K19213**
Description : U4POB The Purchasing of HP and LP Bypass Valve

SYARAT - SYARAT DAN KONDISI
KETENTUAN UMUM

Singkatan dan istilah umum :

"***Purchase Order/PO***" adalah Surat Pesanan Pembelian (*Purchase Order* atau PO).
"**ASET OPERATOR**" adalah PT Komipo Pembangkitan Jawa Bali (PT. KPJB)
"**PLN TJB**" adalah PT PLN (Persero) Unit Induk Pembangkitan Tanjung Jati B.
"**PPN**" adalah Pajak Pertambahan Nilai.

1. **SURAT MENYURAT**
Setiap surat menyurat harus menggunakan Kop Surat Perusahaan yang mencantumkan Nomor *Purchase Order*/PO , Nomor Surat Penawaran, Tanggal dan ditandatangani di atas meterai oleh Penyedia Barang/Jasa (oleh Direktur atau yang dikuasakan berdasarkan Anggaran Dasar Perusahaan), dan dialamatkan kepada: **ASET OPERATOR**, Procurement, Jepara.
Korespondensi antara **ASET OPERATOR** dan Penyedia Barang/Jasa dapat dilaksanakan melalui surat, faksimili, atau *e-mail* dan ditujukan kepada alamat masing-masing Pihak sebagaimana yang tercantum dalam *Purchase Order*/PO.
Salah satu Pihak dapat mengganti alamat, nomor telepon, faksimili dan/atau *E-mail* dengan memberikan pemberitahuan terlebih dahulu kepada Pihak lainnya.

2. **PROSES PENGADAAN**
Proses Pengadaan diadakan dengan sistem yang diputuskan oleh **ASET OPERATOR Procurement** dan **PLN TJB,** dimana prosedur yang berlaku yaitu sebagai berikut:
2.1 Penyedia Barang / Jasa yang diundang untuk Pengadaan adalah yang telah terdaftar di daftar Penyedia Barang/Jasa **ASET OPERATOR** dan telah disetujui oleh **PLN TJB** dengan diterbitkan "SAP CODE" oleh **PLN TJB.**
2.2 Menyerahkan Jaminan Penawaran untuk Surat Penawaran di atas Rp.500,000,000,- (Lima Ratus Juta Rupiah) dan/atau dipersyaratkanpada Undangan Pengadaan Barang / Jasa dengan nilai jaminan minimal 1% (satu persen) dan maksimal 3% (tiga persen) dari Harga Penawaran dari Penyedia Barang/Jasa termasuk PPN sesuai peraturan yang berlaku, kepada **ASET OPERATOR** dengan masa berlaku adalah 90 (Sembilan Puluh) hari kalender terhitung dari tanggal yang tertera di Surat Penawaran Harga. Jaminan Penawaran Harus diterbitkan oleh Bank sesuai dengan Daftar Penyedia Jaminan Terseleksi (DPJT) PLN yang telah disetujui oleh **ASET OPERATOR** dan/atau **PLN TJB**.
2.3 Penyedia Barang/Jasa wajib memenuhi persyaratan yang diminta oleh **ASET OPERATOR Procurement** dan tercantum dalam Surat Penawaran Harga,yaitu sebagai berikut:
2.3.1 Jadwal Pengiriman/pekerjaan yang diajukan dalam Surat Penawaran Harga adalah dalam hitungan **"HARI KALENDER atau TANGGAL yang disepakati"**.
2.3.2 Sertifikat dan/atau dokumen lainnya yang dipersyaratkan dalam permintaan barang/jasa yang akan diserahkan, maka harus tercantum dalam Surat Penawaran Harga dan itu adalah **"SERTIFIKAT/DOKUMEN ASLI"**, kecuali ada ketentuan dan persetujuan lain yang disepakati Para Pihak (Penyedia Barang/Jasa dan **ASET OPERATOR Procurement**).
2.3.3 Harga Yang ditawarkan adalah dalam **"RUPIAH"** sesuai dengan peraturan yang berlaku, kecuali ada ketentuan dan persetujuan lain yang disepakati Para Pihak (Penyedia Barang/Jasa dan **ASET OPERATOR Procurement**).
2.3.4 Surat Penawaran Harga yang diserahkan ke **ASET OPERATOR Procurement** harus menggunakan kop surat resmi perusahaan, bertanggal, bermeterai dan ditandatangani oleh Penyedia Barang/Jasa (oleh Direktur atau yang dikuasakan berdasarkan Anggaran Dasar Perusahaan).
2.3.5 Masa berlaku Surat Penawaran Harga adalah 90 (Sembilan Puluh) Hari Kalender sejak tanggal Surat Penawaran Harga dibuat.
2.3.6 Syarat dan Kondisi penyerahan barang/jasa adalah **"DDP Tanjung Jati B"** (*incoterms* 2000), kecuali ada ketentuan dan persetujuan lain yang disepakati Para Pihak (Penyedia Barang/Jasa dan **ASET OPERATOR Procurement**).
2.3.7 Syarat dan Kondisi Pembayaran adalah 45 (empat puluh lima) Hari Kalender sejak barang/atau bukti penyelesaian pekerjaan dan dokumen lainnya yang dipersyaratkan dalam *Purchase Order*/PO lengkap diterima oleh **ASET OPERATOR** dan **PLN TJB.**
2.3.8 Penyedia Barang/Jasa dipersyaratkan mencantumkan kesanggupan untuk menerbitkan **"Surat Pernyataan Jaminan/*Warranty Letter*"**, yang menyatakan bahwa barang yang dikirimkan adalah Asli, Baru dan Tidak ada cacat. *Purchase Order*/PO lengkap diterima oleh **ASET OPERATOR** dan dapat digunakan, dan ditandatangani di atas meterai oleh Penyedia Barang/Jasa (oleh Direktur atau yang dikuasakan berdasarkan Anggaran Dasar Perusahaan). Jika dipersyaratkan dalam PO
2.4 Surat Penawaran Harga dan Dokumen pengadaan lainnya yang telah diterima oleh **ASET OPERATOR Procurement** adalah mutlak milik **ASET OPERATOR Procurement** dan keputusan yang dibuat oleh **ASET OPERATOR Procurement Komite** adalah mutlak dan tidak dapat diganggu gugat.
2.5 Adapun Syarat dan Ketentuan lainnya yang ditetapkan terpisah adalah satu kesatuan dari Syarat –Syarat dan Kondisi pada lampiran 2.

3. **PERSETUJUAN *PURCHASE ORDER*/PO**
Sebagai konfirmasi persetujuan Pesanan atau syarat-syarat *Purchase Order*/PO, Nomor Referensi Rekanan wajib menandatangani Surat *Purchase Order*/PO di atas meterai yang cukup pada kolom yang tersedia dan mengembalikan kepada Procurement **ASET OPERATOR.**
3.1 ***PROSES PURCHASE ORDER*/PO**
Proses*Purchase Order*/PO diberlakukan dalam tahap sebagai berikut:
3.1.1 *Purchase Order*/PO atas nama **PLN TJB** lebih besar dari Rp.500,000,000,- (Lima Ratus Juta Rupiah), maka Penyedia Barang/Jasa diwajibkan menyerahkan Jaminan Pelaksanaan ditujukan ke **PLN TJB**, bernilai minimal 5% (lima persen) dari total harga barang/ jasa yang tercantum dalam *Purchase Order*/PO termasuk PPN sesuai dengan peraturan yang berlaku.
3.1.2 *Purchase Order*/PO Asli yang telah lengkap ditandatangani oleh **ASET OPERATOR** atas sepengetahuan dan persetujuan **PLN TJB** terlebih dahulu, dan wajib ditandatangani di atas meterai oleh Penyedia Barang/Jasa (oleh Direktur atau yang dikuasakan berdasarkan Anggaran Dasar Perusahaan) dan dikembalikan kepada Procurement **ASET OPERATOR**.
3.1.3 *Aktivasi Surat Purchase Order*/PO adalah 7 (tujuh) Hari Kalender sejak *Purchase Order*/PO dikirimkan melalui surat tertulis dan/atau surat elektronik (surel/*email*) oleh Procurement **ASET OPERATOR**.
3.1.4 *Jangka* Waktu berlakunya *Purchase Order*/PO ditetapkan dalam *Purchase Order*/PO, pada kolom **"*Start Date*"** dan **"*End Date*"**.
3.1.5 *Pada* ketentuan *Pasal* 3.1.1 dimana **ASET OPERATOR** akan mengirimkan surat "*Appointment of awarded Supplier*" melalui surat tertulis dan/atau Surat Elektronik (surel/*email*) kepada Penyedia Barang/Jasa,dan selambat-lambatnya dalam waktu 14 (empat belas) Hari Kalender setelah tanggal dikirimkan surat "*Appointment of awarded Supplier*", maka Jaminan Pelaksanaan harus diterima oleh Procurement **ASET OPERATOR**, apabila telah melewati jangka waktu yang telah ditetapkan dan pihak Penyedia Barang/Jasa belum memberikan Jaminan Pelaksanaan, maka **ASET OPERATOR** mempunyai hak membatalkan perikatan hukum (*Purchase Order*/PO) dengan Penyedia Barang/Jasa. Penyedia Barang/Jasa dianggap mengundurkan diri dan Jaminan Penawaran dicairkan tanpa syarat. Penyedia Barang/Jasa dianggap telah melakukan Wanprestasi dan akan dikenakan sanksi sesuai dengan peraturan yang berlaku di **ASET OPERATOR** dan **PLN TJB**.

3.2 *ASET* **OPERATOR** dan Penyedia Barang/Jasa sepakat dalam hal **ASET OPERATOR** membatalkan *Purchase Order*/PO maka **ASET OPERATOR** dan **PLN TJB** tanpa terkecuali dibebaskan dari segala bentuk gugatan dan laporan hukum, sanksi, ganti rugi, penggantian biaya-biaya maupun ongkos-ongkos apapun sehingga Penyedia Barang/Jasa tidak memiliki hak dan wewenang untuk menuntut pertanggungjawaban apapun lagi dari **ASET OPERATOR** dan **PLN TJB**.

3.3 *Purchase Order*/PO dan Ketentuan lainnya yang ditetapkan terpisah adalah satu kesatuan dari Syarat –Syarat dan Kondisi lampiran 2.

4. JANGKA WAKTU PELAKSANAAN

Jangka Waktu Pelaksanaan adalah Jangka Waktu yang tertera dalam *Purchase Order*/PO sesuai pada ketentuan Pasal 3.1.4, kecuali adanya pengakhiran atau perpanjangan berdasarkan kesepakatan Para Pihak.

5. PERPANJANGAN WAKTU PELAKSANAAN

Setiap perpanjangan waktu pelaksanaan akan diterbitkan Amendemen *Purchase Order*/PO dengan Jangka Waktu yang disepakati Para Pihak.

6. PERUBAHAN *PURCHASE ORDER*/PO *(AMENDMENT PO)*

Setiap perubahan atas *Purchase Order*/PO mengenai Masa berlaku *Purchase Order*/PO, sebagaimana ketentuan pada Pasal 3.1.4 dan syarat-syarat dan kondisi lain hanya akan mengikat apabila disetujui secara tertulis dari **ASET OPERATOR** atas nama **PLN TJB** dengan diterbitkannya *Amendment PO* yang diterbitkan 2 (dua) rangkap yang masing - masing rangkap ditandatangani diatas meterai oleh **ASET OPERATOR** dan Penyedia Barang/Jasa.

7. BARANG-BARANG

7.1 Semua barang yang dipasok/disuplai harus sesuai dengan perincian yang tercantum dalam *Purchase Order*/PO.

7.2 Penyimpangan dari ketentuan-ketentuan di atas tidak diperkenankan tanpa persetujuan tertulis/tanpa *Amendment PO* dari **ASET OPERATOR**.

8. KEMASAN

Kemasan harus dibuat kuat (dalam wujud kayu atau karton) dan layak laut atau udara sesuai dengan standar yang berlaku bagi kemasan. Semua harga bahan kemasan telah termasuk dalam harga yang telah disetujui. Pada setiap kemasan harus dicantumkan nama barang.

PEMERIKSAAN

9.1 Pemeriksaan sebelum pengapalan: apabila pemeriksaan sebelum pengapalan diperlukan, maka **ASET OPERATOR** dan/atau **PLN TJB** akan melakukan pemeriksaan barang di tempat Penyedia Barang/Jasa atau tempat lain yang disetujui Para Pihak.

9.2 Barang akan diperiksa pada waktu penyerahan dilaksanakan setelah lengkap dengan dokumen yang dipersyaratkan pada *Purchase Order*/PO. Barang yang tidak memenuhi syarat-syarat yang ditentukan dalam *Purchase Order*/PO akan dikembalikan kepada Penyedia Barang/Jasa, dan semua biaya dan kerugian akan ditimbulkan menjadi risiko dan tanggung jawab Penyedia Barang/Jasa.

10. SERTIFIKASI

Sertifikat untuk barang (-barang) tertentu yang ditetapkan oleh **ASET OPERATOR** dan **PLN TJB** adalah sebagai berikut:

- Sertifikat Asal Usul Barang (*Certificate of Origin*/COO);
- Sertifikat dari Pabrikan (Certificate of Manufacture/COM);
- Surat Keaslian Barang;
- Sertifikat Hasil Uji Pabrik (Factory *Acceptance Test Certificate*);
- Salinan Dokumen Impor Barang (Copy *Bill of Lading*);
- Sertifikat Analisa (*Certificate of Analysis*/COA);

ataupun dokumen-dokumen pendukung lainnya (sebagaimana dipersyaratkan khusus di *Purchase Order*/PO.

11. PENYERAHAN

11.1 Penyedia Barang/Jasa harus menyerahkan barang (-barang) dalam jangka waktu dan tempat sesuai dengan syarat-syarat yang telah ditentukan dalam *Purchase Order*/PO.

11.2 Dalam jangka waktu paling lambat 7 (tujuh) Hari Kalender sebelum pengiriman barang (-barang), Penyedia Barang/Jasa harus memberitahukan **ASET OPERATOR** mengenai jadwal pengiriman.

11.3 Waktu Penyerahan barang(-barang) dihitung efektif sejak 7 (tujuh) Hari Kalender sejak *Purchase Order*/PO dikirimkan melalui surat tertulis dan/atau Surat Elektronik (surel/ *email*) oleh Procurement **ASET OPERATOR** ditambah jangka waktu pengiriman yang tercantum pada *Purchase Order*/PO sebagaimana ketentuan pada Pasal 3.1.5 dan lengkap disertai dengan penyerahan dokumen pendukung yang dipersyaratkan dalam *Purchase Order*/PO.

12. DENDA SANKSI

12.1 Sanksi atas pencairan Jaminan Penawaran tanpa syarat apabila Penyedia Barang/Jasa membatalkan *Purchase Order*/PO secara sepihak, tanpa persetujuan **ASET OPERATOR** dan **PLN TJB**, sebagaimana ketentuan pada Pasal 2.2 dan Pasal 3.1.6. Penyedia Barang/Jasa dianggap telah melakukan Wanprestasi dan mendapatkan sanksi *blacklist* di lingkungan **ASET OPERATOR** dan **PLN TJB** minimal 2 (dua) tahun.

12.2 Denda atas keterlambatan menyelesaikan pekerjaan atau memasok Barang adalah setiap hari keterlambatan dikenakan 1/1000 (satu per seribu) dengan maksimal denda keterlambatan adalah 5% (lima persen) dari total nilai *Purchase Order*/PO belum termasuk PPN sesuai dengan peraturan yang berlaku dan/atau sama dengan maksimal keterlambatan pengiriman maksimal adalah 50 (lima puluh) Hari Kalender, kecuali ada kesepakatan lain antara Para Pihak. Serta melakukan pemotongan pembayaran kepada Penyedia Barang/Jasa dengan menggunakan nilai denda yang sudah ditetapkan **ASET OPERATOR** tersebut sebagai dasar pemotongan.

12.3 Batas maksimal Penyedia Barang/Jasa dalam keterlambatan adalah 3 (tiga) *Purchase Order*/PO dan Penyedia Barang/Jasa akan di tangguhkan ("*suspend*") atau tidak dapat turut serta dalam proses pengadaan berikutnya. Pemberian Penangguhan ("*suspend*") kepada Penyedia Barang/Jasa adalah hak mutlak **ASET OPERATOR** atas persetujuan **PLN TJB**, dan tanpa pemberitahuan resmi kepada Penyedia Barang/Jasa.

12.4 Penyedia Barang/Jasa tidak dapat membatalkan *Purchase Order*/PO sepihak kepada **ASET OPERATOR** dan/atau **PLN TJB**. Bila Penyedia Barang/Jasa tidak sanggup menyerahkan atau menyelesaikan pekerjaannya dalam waktu yang telah ditentukan, **ASET OPERATOR** dan/atau **PLN TJB** sebagaimana ketentuan pada Pasal 11.3, maka **ASET OPERATOR** memiliki hak dan wewenang penuh untuk:

12.4.1 Mengenakan denda maksimal sebesar 5% (lima persen) dari Total Nilai pada *Purchase Order*/PO atau mencairkan Jaminan Pelaksanaan tanpa syarat;

12.4.2 Dan/ Atau memesan barang/ jasa tersebut kepada sumber lain dan bila ada kelebihan harga yang dibayarkan **ASET OPERATOR** maka Penyedia Barang/Jasa wajib menanggung kelebihan harga tersebut;

12.4.3 Penyedia Barang/Jasa dianggap telah melakukan Wanprestasi dan mendapatkan sanksi *black list* di lingkungan **ASET OPERATOR** dan **PLN TJB** minimal 2 (dua) tahun disertai dengan membatalkan atau mengakhiri PO beserta pengakhiran ikatan Kerjasama denganPenyedia Barang/Jasa.

12.5 Denda atau Sanksi dapat diabaikan dan/atau dihilangkan apabila keterlambatan atas suatu Pengadaan Barang atau Jasa yang dianggap oleh **ASET OPERATOR** dan/ atau **PLN TJB** adalah dikategorikan sebagai suatu "*Force Majeure*" sebagaimana ketentuan pada Pasal 16.

13. TAHAPAN SURAT PEMBERITAHUAN, PERINGATAN, DAN PEMUTUSAN *PURCHASE ORDER*/PO KARENA WANPRESTASI

13.1 Peristiwa-peristiwa yang digolongkan sebagai Wanprestasi adalah:

a. Peristiwa Wanprestasi yang mengakibatkan *Purchase Order*/PO berakhir tanpa melalui surat peringatan dari **ASET OPERATOR** terhadap Penyedia Barang/Jasa adalah sebagai berikut:

i. Penyedia Barang/Jasa terbukti melakukan tindak pidana antara lain adanya pemalsuan surat/dokumen, praktek korupsi, penyuapan, pemberian gratifikasi, persekongkolan, kecurangan dan pemalsuan yang berkaitan dengan proses pengadaan, *Purchase Order*/PO dan/atau pelaksanaan Pekerjaan.

ii. Penyedia Barang/Jasa terbukti melakukan pelanggaran atas peraturan internal **ASET OPERATOR** dan/atau **PLN TJB** terkait *fraud*.

iii. Berdasarkan putusan Pengadilan yang telah mempunyai kekuatan hukum tetap, Penyedia Barang/Jasa dinyatakan dalam keadaan pailit, pembubaran, likuidasi atau diberikan penundaan pembayaran hutang yang menyebabkan Penyedia Barang/Jasa tidak dapat melakukan kewajibannya berdasarkan *Purchase Order*/PO.

iv. Penyedia Barang/Jasa terbukti dikenakan Sanksi Daftar Hitam (*blacklist*) sebelum penandatanganan *Purchase Order*/PO.

v. Apabila Jaminan Penawaran dan/atau Jaminan Pelaksanaan yang diserahkan oleh Penyedia Barang/Jasa kepada **ASET OPERATOR** dan/atau **PLN TJB** selama jangka waktu *Purchase Order*/PO) terbukti palsu/tidak benar.

vi. Setiap pernyataan yang dibuat oleh Penyedia Barang/Jasa di dalam *Purchase Order*/PO yang berkaitan dengan proses pengadaan *Purchase Order*/PO dan/atau pelaksanaan Pekerjaan terbukti tidak sah dan/atau tidak dilaksanakan oleh Penyedia Barang/Jasa.

b. Peristiwa Wanprestasi yang mengakibatkan *Purchase Order*/PO berakhir melalui surat peringatan dari **ASET OPERATOR** terhadap Penyedia Barang/Jasa adalah sebagai berikut:

i. Penyedia Barang/Jasa mengalihkan Pekerjaan baik sebagian atau seluruhnya atau hak atau kewajiban yang diatur dalam *Purchase Order*/PO tanpa persetujuan tertulis dari **ASET OPERATOR**;

ii. Apabila denda yang diatur dalam *Purchase Order*/PO tidak dibayar oleh Penyedia Barang/Jasa kepada **ASET OPERATOR**.

iii. Apabila Penyedia Barang/Jasa tidak melakukan perpanjangan Jaminan Pelaksanaan sebagaimana diatur dalam *Purchase Order*/PO).

iv. Penyedia Barang/Jasa tidak memenuhi baik sebagian atau seluruh kewajiban sesuai ketentuan yang diatur dalam *Purchase Order*/PO.

13.2 Dalam hal terjadi Peristiwa Wanprestasi oleh Penyedia Barang/Jasa sebagaimana dimaksud Pasal 13 ayat 13.1 butir b Syarat Umum *Purchase Order*/PO, **ASET OPERATOR** berhak mengakhiri *Purchase Order*/PO dengan memberikan surat peringatan, dengan ketentuan sebagai berikut:

a. Surat Pemberitahuan (*Notification Letter*): dikirimkan secara tertulis dan/atau melalui *Email* ke Penyedia Barang/Jasa maksimal 14 (empat belas) Hari Kalender sebelum jangka waktu pengiriman jatuh tempo yang tertera pada *Purchase Order*/PO.

b. Surat Peringatan Resmi (Official *Warning Letter*): dikirimkan secara tertulis dan/atau melalui *Email* ke Penyedia Barang/Jasa yang mengalami keterlambatan pengiriman dengan ketentuan sebagai berikut:

i. Surat Peringatan Pertama (*Warning Letter 1*): 1- 10 hari setelah masa berlakunya *Purchase Order*/PO berakhir (*end date*), dan Penyedia Barang/Jasawajib merespon dalam waktu 10 hari setelah Surat Peringatan Pertama (*Warning Letter 1*) diterima.

ii. Surat Peringatan Kedua (*Warning Letter 2*): 21- 30 hari setelah masa berlakunya *Purchase Order*/PO berakhir (*end date*), dan Penyedia Barang/Jasawajib merespon dalam waktu 10 hari setelah Surat Peringatan Kedua (*Warning Letter 2*) diterima.

iii. *Warning Letter 3* ((Surat Pengakhiran/Pemutusan (*Termination Letter*)): 51 hari setelah masa berlakunya *Purchase Order*/PO berakhir (*end date*).

c. Surat Pengakhiran/Pemutusan (*Termination Letter*): dikirimkan secara tertulis dan/atau melalui *Email* ke Penyedia Barang/Jasa setelah 2 (dua) surat pada Pasal 13.2.a dan 13.2.b di atas dikirimkan dan tidak tercapainya kesepakatan antara Para Pihak dalam penyelesaian permasalahan yang dimaksud dalam jangka waktu masa berlakunya *Purchase Order*/PO, maka secara sepihak yaitu **ASET OPERATOR** atas persetujuan **PLN TJB**, akan membatalkan *Purchase Order*/PO dengan mengirimkan Surat Pemutusan (*Termination Letter*) kepada Penyedia Barang/Jasa.

d. Apabila Penyedia Barang/Jasa tidak menyelesaikan pekerjaan serta tidak tercapainya kesepakatan antara Para Pihak dalam penyelesaian pekerjaan yang dimaksud dalam jangka waktu masa berlakunya *Purchase Order*/PO dalam waktu sebagaimana disebutkan pada Pasal 13 ayat 13.2 butir c, maka **ASET OPERATOR** berhak mencairkan Jaminan Pelaksanaan Penyedia Barang/Jasa pada periode berjalan, dan mengakhiri *Purchase Order*/PO secara sepihak.

13.3 Dalam hal Penyedia Barang/Jasa telah melakukan pemulihan atau perbaikan sebagaimana dimaksud pada bab ini, dan pemulihan atau perbaikan tersebut disetujui oleh **ASET OPERATOR** maka peringatan tertulis yang telah diterbitkan tersebut tidak akan diperhitungkan sebagai pemberian peringatan yang berkelanjutan atau tidak berlaku kumulatif pada pemberian peringatan berikutnya.

13.4 Atas setiap pengakhiran dari *Purchase Order*/PO, seluruh kewajiban-kewajiban masing-masing Pihak berdasarkan *Purchase Order*/PO wajib berhenti, kecuali:

a. Sehubungan dengan kewajiban-kewajiban pembayaran yang ditimbulkan dari tindakan-tindakan yang diambil sebelum pengakhiran tersebut (termasuk namun tidak terbatas pada hak normatif Pekerja Penyedia Barang/Jasa);

b. Sebagaimana ditentukan lain dalam *Purchase Order*/PO;

c. Bahwa ketentuan terkait Jaminan Pelaksanaan akan tetap berlaku walaupun *Purchase Order*/PO telah diakhiri; dan/atau

d. Pengakhiran tersebut tidak akan mengurangi setiap hak atas ganti rugi atau setiap perbaikan lainnya yang mungkin dimiliki oleh masing-masing pihak berdasarkan *Purchase Order*/PO.

13.5 Dalam hal terjadi Peristiwa Wanprestasi Penyedia Barang/Jasa, maka Penyedia Barang/Jasa akan dikenakan hukuman/denda sesuai ketentuan pada *Purchase Order*/PO.

13.6 **ASET OPERATOR** akan memberlakukan hukuman daftar hitam *(blacklist)* bagi setiap pengakhiran *Purchase Order*/PO yang disebabkan karena wanprestasi Penyedia Barang/Jasa sebagaimana diatur lebih lanjut dalam ketentuan yang berlaku pada **ASET OPERATOR**.

13.7 Terhadap pengakhiran *Purchase Order*/PO, Para Pihak sepakat untuk tidak memberlakukan ketentuan Pasal 1266 Kitab Undang-Undang Hukum Perdata.

13.8 Akibat-akibat Pemutusan *Purchase Order*/PO:

a. **ASET OPERATOR** dan/atau **PLN TJB** dibebaskan dari segala tuntutan hutang-hutang Penyedia Barang/Jasa kepada pihak ketiga yang harus ditanggung oleh Penyedia Barang/Jasa;

b. **ASET OPERATOR** dan Penyedia Barang/Jasa segera mengadakan pemeriksaan bersama yang dituangkan dalam Berita Acara Pemeriksaan Pekerjaan dan/atau *Good Receipt* (GR) dan/atau *Join Inscpection* (JI) yang meliputi beberapa prestasi yang telah selesai dikerjakan oleh Penyedia Barang/Jasa. Apabila Penyedia Barang/Jasa tidak bersedia mengadakan pemeriksaan bersama, maka **ASET OPERATOR** akan mengadakan pemeriksaan terakhir dan hasilnya dianggap sebagai hasil pemeriksaan bersama;

c. Penyedia Barang/Jasa hanya berhak mendapatkan pembayaran sesuai kemajuan pekerjaan yang telah dilaksanakan dan disetujui **ASET OPERATOR**. Peralatan dan bahan-bahan yang belum dipergunakan tidak termasuk dalam penilaian kemajuan pekerjaan;

d. **ASET OPERATOR** akan mengambil alih pekerjaan untuk diselesaikan dengan *Purchase Order*/PO lain atau dengan cara lain;

14. HARGA

14.1 Harga yang tercantum dalam *Purchase Order*/PO ini adalah tetap, tidak berubah dan mengikat.

14.2 Bagi Pengusaha Kena Pajak ("**PKP**") harga yang tercantum dalam *Purchase Order*/PO tidak termasuk PPN sesuai dengan peraturan yang berlaku. PPN harus dinyatakan terpisah dari harga barang(-barang) yang dipesan.

15. JAMINAN PENAWARAN DAN JAMINAN PELAKSANAAN

Jaminan dipersyaratkan untuk Pengadaan sebagai berikut :

15.1 Jaminan Penawaran adalah bernilai minimal 1% (satu persen) maksimal 3% (Tiga persen) dari Total Nilai Perkiraan Sendiri (HPS) atau Surat Penawaran Harga dari Penyedia Barang/Jasa termasuk PPN sesuai dengan peraturan yang berlaku, untuk nilai Penawaran lebih besar dari Rp.500,000,000,- (lima ratus juta rupiah), sebagaimana ketentuan pada Pasal 2.2 .

15.2 Jaminan Pelaksanaan adalah bernilai minimal 5% (lima persen) dari Total Nilai pada *Purchase Order*/PO termasuk PPN sesuai dengan peraturan yang berlaku untuk nilai Pembelian lebih besar dari Rp.500,000,000,- (lima ratus juta rupiah), sebagaimana ketentuan pada Pasal 3.1.1 di atas. Dengan ketentuan masa berlaku Jaminan Pelaksanaan adalah sebagaimana ketentuan pada Pasal 3.1.4 ditambah sekurang-kurangnya 50 (Lima Puluh Hari) Hari Kalender.

15.3 Jaminan yang disertakan harus mengikuti persyaratan yang diminta oleh **ASET OPERATOR** dan/atau **PLN TJB** dengan ketentuan sebagai berikut :

15.3.1 Mengikuti format yang sudah dibakukan oleh **ASET OPERATOR dan/ atau PLN TJB**.

15.3.2 Menggunakan mata uang dalam "Rupiah", kecuali ada ketentuan dan persetujuan lain yang disepakati Para Pihak (Penyedia Barang/ Jasa dan ASET OPERATOR Procurement).

15.3.3 Harus diterbitkan oleh Bank sesuai dengan Daftar Penyedia Jaminan Terseleksi (DPJT) PLN yang telah disetujui oleh **ASET OPERATOR** dan/atau **PLN TJB.**

15.4 Jaminan Pelaksanaan diserahkan kepada **ASET OPERATOR** maksimal 14 (empat belas) Hari Kalender setelah **"Surat Penunjukan Pemenang / *Appointment of Awarded Supplier*"** dikirimkan melalui surat tertulis dan/atau Surat Elektronik (Surel/ *Email*) oleh **ASET OPERATOR** kepada Penyedia Barang/Jasa, sebagaimana ketentuan pada Pasal 3.1.5.

15.5 Asli dari Jaminan akan dikembalikan ke Penyedia Barang/Jasa apabila semua kewajiban dari Penyedia Barang/Jasa telah dinyatakan selesai oleh **ASET OPERATOR** atas persetujuan **PLN TJB.**

15.6 Jaminan dapat dimungkinkan untuk diperpanjang masa berlakunya atas pemintaan dari **ASET OPERATOR** dan/atau **PLN TJB** kepada Penyedia Barang/Jasa.

16. *FORCE MAJEURE*

16.1 Peristiwa, kejadian atau keadaan berikut ini adalah *Force Majeure*: Kehendak Tuhan (*Act of God*) meliputi namun tidak terbatas pada gempa bumi, dari banjir, epidemi, kebakaran, perang, huru-hara, pemogokan dan/atau pemberlakuan peraturan pemerintah yang mengatur atau berhubungan dengan pelaksanaan/ pengiriman di dalam *Purchase Order*/PO.

16.2 Dalam hal terjadi suatu peristiwa, kejadian atau keadaan *Force Majeure*, Penyedia Barang/Jasa wajib memberitahukan secara tertulis dan/atau *email* dengan melampirkan bukti-bukti dari instansi yang berwenang kepada **ASET OPERATOR** selambat-lambatnya 3 (tiga) hari sejak terjadinya suatu peristiwa, kejadian atau keadaan *Force Majeure*.

16.3 Dalam hal pemberitahuan sebagaimana ketentuan Pasal 16.2 di atas terlampaui atau tidak dilaksanakan maka Para Pihak sepakat bahwa kejadian tersebut bukan merupakan keadaan *Force Majeure*.

16.4 Baik Penyedia Barang/Jasa maupun **ASET OPERATOR** dan **PLN TJB** dibebaskan dari setiap dan semua tanggung jawab yang timbul sebagai akibat terjadinya suatu peristiwa, kejadian atau keadaan *Force Majeure*.

17. *TUNTUTAN* DARI PIHAK KETIGA

Penyedia Barang/Jasa harus membebaskan dan melindungi **ASET OPERATOR** dan **PLN TJB** dari segala tuntutan dari pihak ketiga yang timbul atau akan timbul sehubungan dengan *Purchase Order*/PO.

18. *GARANSI* (Apabila Dipersyaratkan di dalam *Purchase Order*/PO)

Penyedia Barang/Jasa menjamin ke **ASET OPERATOR** dan/ atau **PLN TJB**, bahwa barang-barang yang dikirim sesuai dengan spesifikasi yang disepakati sebagaimana ketentuan pada Pasal 2.3.8. Barang tidak cacat atau rusak material atau teknis, baru (bukan barang bekas pakai) dan digaransi oleh Pabrik dan/atau Penyedia Barang/Jasa. Garansi harus berlaku selama jangka waktu 18 (delapan belas) bulan sejak tanggal pengiriman barang atau 12 (dua belas) bulan sejak tanggal pemasangan atau operasi awal atas barang ("**Masa Garansi**"). Apapun yang terjadi terlebih dahulu dalam Masa Garansi, ditemukan kerusakan atau kecacatan barang, **ASET OPERATOR** berkewajiban untuk memberitahukan secara tertulis dan/atau melalui *email* atas hal tersebut kepada Penyedia Barang/Jasa.Dan dalam waktu 3 x 24 jam setelah diterimanya pemberitahuan tersebut, Penyedia Barang/Jasa wajib memperbaiki barang yang cacat atau rusak tersebut, dan apabila barang tidak bisa diperbaiki dalam jangka waktu paling lambat 30 (tiga puluh) Hari Kalender, maka Penyedia Barang/Jasa harus mengganti barang yang rusak tersebut dengan barang baru dengan kualitas dan spesifikasi yang sama tanpa ada penambahan biaya apapun dari **ASET OPERATOR**.

19. *TAGIHAN*

Untuk melakukan penagihan, Penyedia Barang/Jasa harus memenuhi syarat-syarat penagihan dengan melengkapi dokumen-dokumen antara lain sebagai berikut:

19.1 Surat Permohonan Pembayaran: 1 (satu) rangkap Asli

19.2 Kwitansi : 3 (tiga) rangkap, 1 (satu) rangkap bermeterai cukup dan 2 (dua) rangkap lainnya tanpa meterai .

19.3 Invoice : 3 (tiga) rangkap, 1 (satu) rangkap bermeterai cukup dan 2 (dua) rangkap lainnya tanpa meterai.

19.4 Faktur Pajak : 2 (dua) rangkap.

19.5 Berita Acara Penyelesaian Pekerjaan (BAPK) dan/atau *Goods Receipt* dan/atau *Joint Inspection* : 1 (satu) rangkap Asli.

19.6 Berita Acara Serah Terima (BAST) barang/jasa/pekerjaan dan/atau *Minutes Of Verification* (MOV): 1 (satu) rangkap Asli.

19.7 NPWP dan SPPKP : 1 (satu) rangkap *Copy*.

19.8 Sertifikat Asal Barang dan/atau Sertifikat Manufaktur: 1 (satu) asli dan/atau 1 (satu) *Copy* (Apabila dipersyaratkan pada *Purchase Order*/PO).

19.9 Surat Jaminan/Garansi yang menyatakan masa garansi barang adalah 18 (delapan belas) bulan sejak pengiriman atau 12 (dua belas) bulan sejak instalasi : 1 (satu) asli dan 2 (dua) *Copy* (Apabila dipersyaratkan pada *Purchase Order*/PO).

19.10 Jaminan Pelaksanaan dan Surat Konfirmasi keabsahan Jaminan Pelaksanaan : 1 (satu) rangkap *Copy* (Apabila dipersyaratkan pada *Purchase Order*/PO).

19.11 SIUP/NIB dan SIUJK : 1 (satu) rangkap *Copy* (Apabila ada atau apabila dipersyaratkan pada *Purchase Order*/PO)

19.12 Syarat-syarat lain yang belum tercantum sebagaimana poin-poin diatas namun dipersyaratkan khusus pada *Purchase Order* /PO wajib dipenuhi oleh Penyedia Barang/Jasa.

(Persyaratan penagihan terlampir di lampiran " Tata Cara Penagihan")

20. *PEMBAYARAN*

Kecuali ditentukan lain dalan *Purchase Order*/PO :

20.1 Pembayaran akan dilakukan pada 45 (empat puluh lima) Hari Kalender setelah barang/ Jasa dinyatakan diterima dengan Bukti Asli *Goods Receipt/ Completion Work*, dan dokumen-dokumen penagihan telah diterima dengan baik, lengkap dan benar.

20.2 Pembayaran akan dilakukan melalui bank transfer.

21. LAIN - LAIN

21.1 Syarat-syarat umum ini berlaku sah dan mengikat, kecuali ada ketentuan lain yang tertera pada *Purchase Order*/PO.

21.2 Bilamana **ASET OPERATOR** serta Penyedia Barang/Jasa menandatangani kesepakatan tambahan sebagai satu kesatuan dari *Purchase Order*/PO dan ternyata menimbulkan pertentangan dengan klausul-klausul di dalam *Purchase Order*/PO maka **ASET OPERATOR** dan Penyedia Barang/Jasa sepakat akan selalu menafsirkan dengan cara memilih, mematuhi dan menerapkan klausul yang lebih menguntungkan **ASET OPERATOR** semata.

21.3 **ASET OPERATOR** dan/atau **PLN TJB**, setiap saat memiliki hak eksklusif untuk melakukan evaluasi berkaitan dengan kinerja, kepatuhan atau hasil pelaksanaan kewajiban oleh Penyedia Barang/Jasa, dimana hasil evaluasi tersebut akan disampaikan kepada Penyedia Barang/Jasa dalam bentuk pernyataan tertulis.

21.4 Evaluasi tersebut dilakukan dalam rangka menjamin keberlangsungan PLTU Tanjung Jati B Jepara sehingga hasil evaluasi sebagaimana dimaksud menjadi dasar bagi **ASET OPERATOR** dan/atau **PLN TJB** untuk mengkaji ulang status serta jangka waktu *Purchase Order*/PO dan/atau penentuan status Penyedia Barang/Jasa dalam Daftar Hitam Penyedia Barang/Jasa **ASET OPERATOR** dan/atau **PLN TJB**.

21.5 *Purchase Order*/PO dibuat, diatur dan ditafsirkan sesuai dengan hukum Negara Republik Indonesia.

21.6 Jika terjadi perselisihan yang tidak mendapatkan solusi maka **ASET OPERATOR** dan Penyedia Barang/Jasa sepakat untuk dapat melakukan pengakhiran *Purchase Order*/PO dan tidak memberlakukan ketentuan Pasal 1266 Kitab Undang-undang Hukum Perdata.

21.7 Syarat-syarat dan kondisi ini dibuat dalam Bahasa Indonesia dan Bahasa Inggris. Dalam hal adanya inkonsistensi atau penafsiran yang berbeda antara versi Bahasa Indonesia dan versi Bahasa Inggris, versi Bahasa Indonesia dari Syarat-syarat dan kondisi ini akan berlaku dan versi Bahasa Inggris harus dianggap secara otomatis diubah (perubahan mana berlaku sejak tanggal ditandatanganinya versi bilingual ini) untuk menjadikan bagian yang relevan dari versi Bahasa Inggris sesuai dengan bagian yang relevan dari versi Bahasa Indonesia.

21.8 **ASET OPERATOR** berhak melakukan Audit di Waktu tertentu kepada rekanan Penyedia Barang/Jasa, Proses pengaudit dilakukan oleh **ASET OPERATOR** didampingi tim Auditor yang ditunjuk **ASET OPERATOR.**

KETENTUAN MENYANGKUT LINGKUNGAN, KESEHATAN, DAN KESELAMATAN KERJA

1. **STANDART KESELAMATAN UNTUK BAHAN BAHAN YANG BERACUN**

1.1 Penyedia Barang/Jasa harus memberikan daftar data keselamatan material - material (MSDS) untuk seluruh *chemical*, pelumas, lem, cairan, pembersih dan bahan bahan lainya yang berpotensi beracun yang rekanan akan gunakan dalam pelaksanaan pekerjaan.

1.2 Penyedia Barang/Jasa harus mengikuti syarat - syarat untuk penyimpanan, penanganan dan pembuangan meterial termasuk syarat - syarat untuk Peralatan Perlindungan Personal dan peralatan Pernafasan (RPE) yang ditentukan oleh **ASET OPERATOR**.

1.3 Setiap Material yang mengandung zat - zat yang berpotensi beracun yang ada di *Site* yang tidak sesuai dengan persyaratan MSDS dan belum disetujui oleh **ASET OPERATOR**, harus segera dihilangkan atau dipindahkan dari *site* oleh Penyedia Barang/Jasa sampai persetujuan tersebut diperoleh.

2. **PURCHASE *REQUISITION* JASA/*SERVICE***

2.1 Dokumen Analisa Kerja Aman (*Job Safety Analysis* / JSA) atau dokumen identifikasi bahaya lainnya yang terkait dengan Jasa.

2.2 Prosedur kerja aman / instruksi kerja dan/atau dokumen EHS lainnya yang terkait dengan Jasa.

2.3 Surat keterangan sehat dari dokter untuk personel yang terkait dengan jasa.

2.4 Foto *copy* Sertifikat kompetensi untuk personel yang terkait dengan jasa.

2.5 Foto *copy* Sertifikat Kelayakan atas Peralatan Angkat dan Angkut yang masih **"VALID"** yang terkait dengan Jasa.

2.6 Foto *copy* Surat Keterangan Catatan Kepolisian (SKCK) dan kartu identitas (Kartu Tanda Penduduk/KTP atau Paspor) masih berlaku untuk lampiran Formulir *Request* ID *Card.*

2.7 Foto *copy* Surat Ijin Mengemudi (SIM) yang masih berlaku untuk pengendara mobil perusahaan untuk lampiran formulir *"Vehicle Gate Pass Request".*

2.8 Foto *copy* surat KIR yang masih berlaku untuk kendaraan operasional kategori tertentu untuk lampiran formular *"Vehicle Gate Pass Request".*

2.9 Surat pernyataan dari Manajemen perusahaan bahwa akan mematuhi peraturan perundangan terkait dengan Lingkungan dan

2.10 Keselamatan, Kesehatan Kerja (LK3), salah satunya seperti berikut :

2.10.1 Menyediakan Alat Pelindung Diri (APD) untuk seluruh karyawan yang standard dan sesuai

2.10.2 Bertanggung jawab atas limbah/sampah yang dihasilkan oleh pekerjaan jasa tersebut serta selalu menjaga kerapihan dan kebersihan area kerja.

2.10.3 Membuat "Surat Pernyataan" bahwa perusahaan tidak mencemari lingkungan

2.10.4 Melampirkan Sertifikat ISO 14001 dan Sertfikat PROPER yang dimilki (apabila dipersyaratkan dalam RFQ & *Purchase Order*/PO)

3. **PURCHASE *REQUISITION* BARANG**

Menyediakan dokumen yang terkait dengan persyaratan Lingkungan, Keselamatan dan Kesehatan Kerja (LK3), seperti:

3.1 Lembar Data Keselamatan Bahan / LDKB (*Material Safety Data Sheet*/MSDS) untuk Bahan Beracun dan Berbahaya (B3),seperti: bahan kimia/resin/oli/*grease*/dll.

3.2 Petunjuk Pengoperasian secara aman (*Safety Operating Manual*) untuk peralatan/mesin/alat kerja/ dll.

3.3 Persyaratan penyimpanan serta penanganan secara manual.

3.4 Atau dokumen lainnya yang terkait dengan persyaratan dan perundangan Lingkungan, Keselamatan & Kesehatan Kerja (LK3).

4. **KETENTUAN MENYANGKUT KETENAGA KERJAAN**

Berikut persyaratan dari HRD yaitu sebagai berikut :

4.1 *Copy* sertifikat kepesertaan perusahaan di BPJS Ketenagakerjaan.

4.2 *Copy* kartu kepesertaan BPJS Ketenagakerjaan dari setiap karyawan yang dipekerjakan.

4.3 Ijin Operasional dari Disnaker Propinsi Jawa Tengah Cq. Disnaker Jepara Untuk pekerjaan yang di alih-daya kan (*Outsource*).

4.4 Surat Pemberitahuan ke Disnaker Jepara untuk pekerjaan jasa pemborongan.

4.5 *Copy* Perjanjian kerja antara perusahaan dengan masing-masing karyawan.

1. Subject

U4PO2026 HP and LP Bypass Valve

2. Background

Planned Outage Class- B will be conducted next year (2026) for unit #4 and the bypass valve will be inspected in every single overhaul

3. Spare Part Data

3.1. System : HPB, EHB, ATT and LPB

3.2. Equipment : HP Bypass Valve (HPB-PCV010)
LP Bypass Valve (LPB-PCV010A/B)
HP Bypass Valve Control Oil Supply Pump (EHB-P010A/B)
HPB Spray Control valve (ATT-TCV003)
HPB Spray CV Inlet Isolation Valve (3ATT-HV001)
HPT Bypass Electro Hydraulic Control Oil Unit (EHB-Z010)

3.3. Brand : **IMI CCI**

3.4. Spare Part Group :

- ■ Overhaul
- ☐ PM &PdM
- ☐ Run to Failure
- ☐ Strategic Parts
- ☐ Strategic Equipment

3.5. Usage Plan :
For Planned Outage Unit #4 Class B 2026

3.6. Description :
Item to be purchased :

No.	Equipment	Item No.	Description	Proc. qty	Unit
1	HP Bypass Valve	208276	GASKET SPIRAL WOUND, PART. NO : 000003112570, DWG. POS NO: 34, EQUIPMENT; HP BYPASS VALVE, DRAWING: 202418-1CH, MODEL: DRE 180 C, MFG: IMI CCI	1	Pcs
2		208277	GASKET SPIRAL WOUND, PART. NO :000003112576, DWG. POS NO: 35, EQUIPMENT; HP BYPASS VALVE, DRAWING: 202418-1CH, MODEL: DRE 180 C, MFG: IMI CCI	2	Pcs
3		208278	PACKING,PREFORMED, RING, PART. NO : 000003158435, DWG. POS NO: 36, EQUIPMENT; HP BYPASS VALVE, DRAWING: 202418-1CH, MODEL: DRE 180 C, MFG: IMI CCI	4	Pcs
4		223338	HOSE,METALLIC, FLEXIBLE HOSE FOR HP BYPASS VALVE, PART NO. 000.101.006.197, MFG. CCI	2	Pcs
5	LP Bypass Valve	215208	PACKING SPACER, PART NO. : 320401095, DWG. POS NO: 15, EQUIPMENT; LP BYPASS VALVE A/B, DRAWING: 202418-7CH, MODEL NO: NBSE 60-700-2, MFG: IMI CCI	2	Pcs
6		208287	PACKING,PREFORMED, RING, PART. NO : 000003158910, DWG. POS NO: 34, EQUIPMENT; LP BYPASS VALVE A/B, DRAWING: 202418-7CH, MODEL NO: NBSE 60-700-2, MFG: IMI CCI	2	Pcs

7		208288	PACKING,PREFORMED, RING, PART. NO : 255670111, DWG. POS NO: 35, EQUIPMENT; LP BYPASS VALVE A/B, DRAWING: 202418-7CH, MODEL NO: NBSE 60-700-2, MFG: IMI CCI	2	Pcs
8		208289	PACKING,PREFORMED, RING, PART NO : 036, EQUIPMENT : LP TURBINE BYPASS VALVE, DRAWING NO : D A1 202418-7CH, ASSEMBLY DRAWING NO : 103.233.844.500	2	Pcs
9	Oil Supply Pump	221483	CONNECTOR,HOSE, ND 10, 000003195560, HYDRAULIC POWER UNIT HV 200	2	Pcs
10	HPU Unit	207216	CONNECTOR,HOSE, FLEXIBLE HOSE, DN 16X2000, PART. NO: 000101006118, EQUIPMENT; HP & LP BYPASS VALVE SPRAY CV INLET ISOLASTION VALVE, MFG: IMI CCI, p/n 6,7,8, Hydraullic Power Unit HV200	6	Pcs
11	HPB Spray Control valve	107278	PARTS KIT, SOFT GOODS KIT, REF NO: 2KT115946_034~035, BRAND: IMI CCI	1	Set
12	HPB Spray CV Inlet Isolation Valve	107272	PARTS KIT, SOFT GOODS KIT, REF NO: 2KT116190_34, 36, 37, BRAND: IMI CCI	1	Set

4. Work Scope

Material supply

5. CSMS Risk Level

■ Low

6. Bidder Qualification

6.1. SOLE AGENT ONLY

6.2. Vendor should have CSMS (Contractor Safety Management System) from PLN

7. Delivery of material and/or services

7.1. Required date is 1 April 2026

7.2. Delivery point is KPJB's Warehouse, PLTU Tanjung Jati B Unit 3&4, Jepara, Central Java.

8. Requirement of Documents

Within delivery the materials, supplier should submit documents as follow:

8.1. Orginal or Electronic COO (Certificate of Origin)

8.2. Original or Electronic COM (Certificate of Manufacturer)

9. Technical Specification

9.1. All of technical specification should be comply with determined specification, cannot be changed, no crack, should be new 100%, genuine, no defect, and can be installed and used properly.

9.2. In the case PT KPJB decline the delivered material, supplier should replace the material. If supplier can't replace it, they will be penalized in accordance to General Term & Condition (GTC) of the PO.

10. Acceptance Criteria

10.1. Delivery time is complied.

10.2. All delivered materials are accordance to PO requirement, specification and condition of the TOR.

10.3. All of required document are fulfilled.

11. Standard of Quality

Quality of the material and/or services should comply with standard, code, manufacturer specification and user's requirement.

12. Warranty

Supplier should warrant the material for 1 year after material being receiving by PT. KPJB.

Prepared by	Checked by	Approved by
Andhi Pradana Staff	Agus Widodo Turbine Leader	Lim Hyung Chul Mechanical Manager
Date :	Date :	Date :

HPTB VALVE

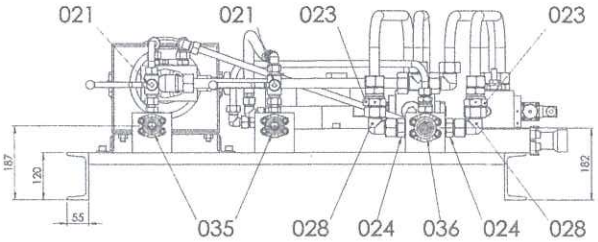

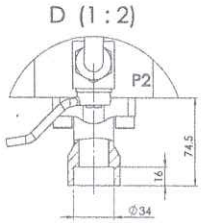

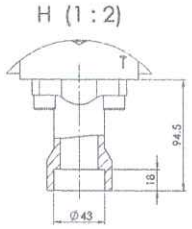

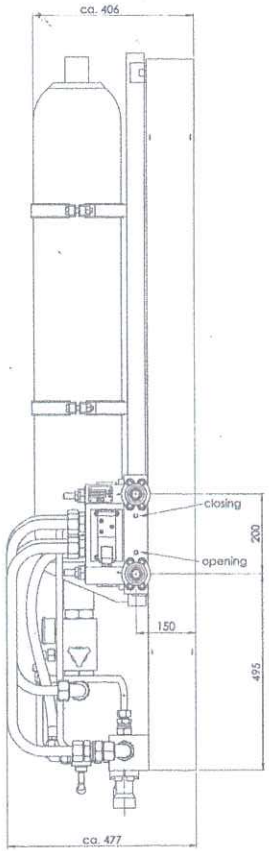

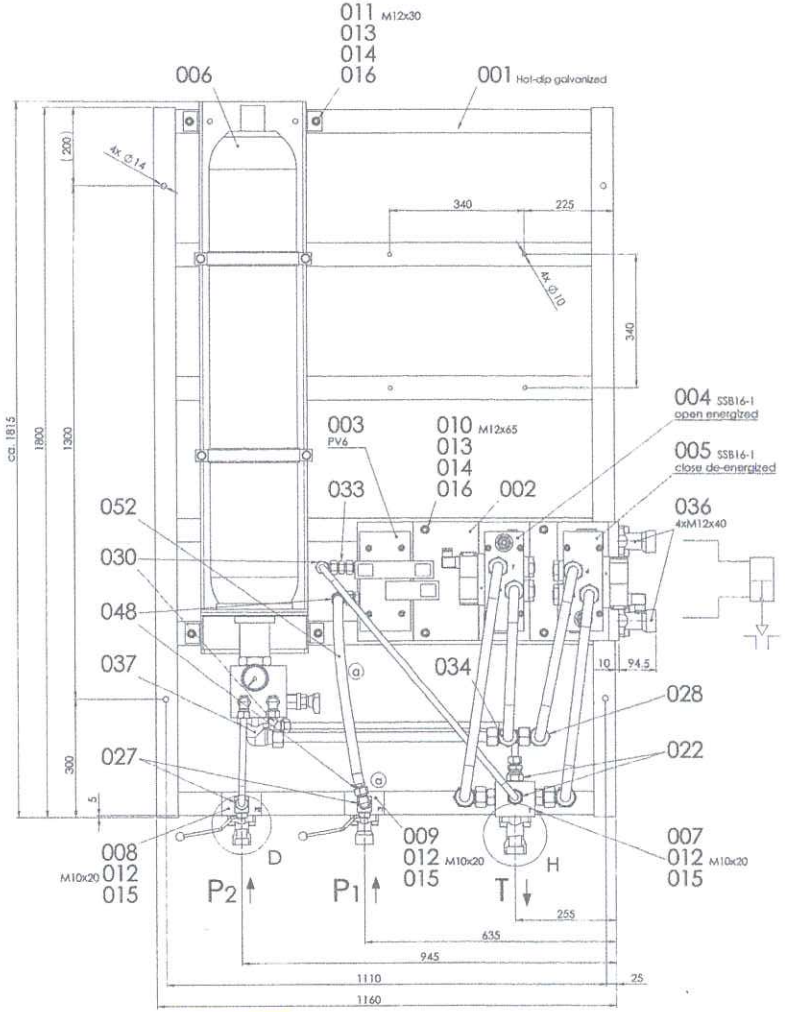

Pos	Item Code	Description DRAWING UND REVISION	Search Key 1 (Materiel Rev.)	Net Quantity	Un.
001	103.233.992.200	Rack T160x1600x120 103.233.992.500 REV 0	S235JR1.0038	1	STK
002	103.233.941.000	Bracket 80x300x710 103.233.941.500 Rev 0	ALMGSi 1/H	1	STK
003	103.215.282.001	Special control unit NG 6 WAG NR.672.1088	PVS6	1	STK
004	103.227.258.200	Safety control unit SSB 16-1/24V 103.227.258.500 Rev 0	De-energized	1	STK
005	103.227.258.201	Safety control unit SSB 16-1/24V 103.227.258.500 Rev 0	energized	1	STK
006	000.101.002.730	Accumulator sell BST 1x32 REF 01-ZS00077-00025	ABR / D=22	1	STK
007	103.234.038.001	Terminal block T 100x90x100 103.234.038.500 Rev 0	ALMGSi 1/H	1	STK
008	103.234.434.003	Connection block P2 100x70x100 103.234.434.500 Rev 0	ALMGSi 1/H	1	STK
009	103.234.434.002	Connection block P1 100x70x100 103.234.434.500 Rev 0	ALMGSi 1/H	1	STK
010	015.251.410.461	Cyl-Screw DIN 912-M12x90 8.8	8.8-ZN 5 B	4	STK
011	015.251.440.301	Cyl-Screw DIN 912-M12x30 8.8	8.8-ZN 5 B	4	STK
012	015.251.430.121	Cyl-Screw DIN 912-M10x20 8.8	8.8-ZN 5 B	6	STK
013	015.505.500.810	Spring washer 13x28 BN801	50 CRV 4/ 60 SICR 7	8	STK
014	015.505.610.810	Spring washer 13.6x21.0 BN803	50 CRV 4/ 60 SICR 7	8	STK
015	015.505.610.510	Spring washer 13.6x17.8 BN803	50 CRV 4/ 60 SICR 7	6	STK
016	015.201.811.910	Hex nut DIN 934-M12 BN117	8-ZN 5 B	8	STK
021	000.003.196.586	Ball valve DN13-PA16 MPA BR+160-BMV-1125 Rev	St-Zn 8 C/PPM	2	STK
022	020.803.831.162	EO-Non-return valve RHZ 16-BM RHZ16SMEDOF	ST-ZN 8 C	2	STK
023	020.803.851.256	EO-Non-return valve RHO 23-PS Rev	St-Zn 8 C/Viton	2	STK
024	020.805.841.256	EO-Connection BSE 25-SM-ED N 020 805 64 Rev	St-Zn 8 C/Viton	2	STK
027	020.805.641.166	EO-Connection BSE 16-SM-ED N 020 805 64 Rev	St-Zn 8 C/Viton	3	STK
028	020.808.801.258	EO-Connection BW 25-S-Vi-A3C BW25SVITA3C	ST-ZN 8 C / A3C / VITON	3	STK
030	020.808.601.166	EO-Connection BW 16-S-Vi BW16SVITOF	ST-ZN 8 C/OF/VITON	4	STK
033	020.805.580.166	EO-Connection DA 16-S DA 16SOMD	ST-ZN 8 OA3OV/TON	1	STK
034	020.805.731.252	EO-Connection XT 25-S T25SOFX	ST-ZN 8 C/OF	1	STK
035	000.101.007.388	EO-Connection BSL34/34 BSL34/34SMVIT	1.4571	2	STK
036	000.101.007.387	EO-Connection BSL35/43 BSL35/43SMVIT	1.4571	3	STK
037	020.803.842.256	EO-Connection MFS 36/25-0 MFS36/25SVITOF Schrauben M12	ST-ZN 8 C/OF/VITON	1	STK
041	020.803.801.252	EO-Nut M 25-S M25SOFX	ST-ZN 8 C/OF	12	STK
042	020.803.801.162	EO-Nut M 16-S M16SOFX	ST-ZN 8 C/OF	10	STK
046	020.803.901.253	EO-Progressivring 25-S-71 DPR25S71X	1.4571	12	STK
047	020.803.901.163	EO-Progressivring 16-S-71 DPR16S71X	1.4571	10	STK
050	000.000.270.025	Pipe 25.0x 3,0 DIN 17458 Rev 00	X 6 CrNiMoTi 17 12 2	8	M
051	000.000.270.016	Pipe 16.0x 2,0	X 6 CrNiMoTi 17 12 2	8	M
052	000.101.008.197	Flexible Hose DN12 x600		0.6	M

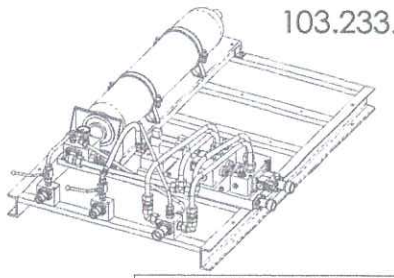

103.233.912.200

Max. Betriebsueberdruck	16 MPa
Pruefueberdruck	24 MPa

general tolerances per ISO 2768 - mK

Weight in kg	325.09
Material	

-- RELEASED, released for manufacturing --

Part of pipe Pos.051 replaced by flexible hose Pos. 052 and 1x EO-connection Pos.020 added

Modification	Text					
a	uffing_t	2.11.15	wolpert_r	12.11.15	Sudo	12.11.15
Original	mamd_h	21.12.94	wolpert_r	20.01.95		
	Preparation:	Date	Review / release Eng.	Date	Review QA	Date

Sec. number: 14 | Similar Dwg.:

Replaced by: | Replaced for: | Original Scale: 1:3

Tanjung_Jati

Open Rack

Zusammenstellung / Assembly

32l Speicher, 2xSSB, PV6, PVR, PVN

SolidWorks | Bar - Code

CCI A.G. CH-8404 Winterthur

E	A1	103.233.912.500	1 - 1 a

This drawing is entrusted to the recipient personally. But the copyright remains with us. It must not be copied, reproduced or in any way communicated or made accessible to third parties without our written consent

Machining regulations see Drawing Standards

P 3/2015

F1 1KT110501 HPBV OUTLINE

PL分離 1

Parts List

Pos	Name	Material	QTY	Remarks
001	Valve body	A182-F91	1	
003	Transition piece	A182-F22	1	
004	Outlet nozzle	A182-F11	1	
005	Stellite cladding	S-CoCr20W15Ni	1	Haynes Alloy 25
006	Bonnet	A182-F22	1	
007	Nozzle body	10 CrMo 9 10	1	
008	Jet cage	X 20 CrMoV 12 1	1	
009	Flange	15 NiCuMoNb 5	2	equivalent to A335Gr.P91
011	Valve stem	X19CrMoVNbN111	1	
012	Distance ring	10 CrMo 9 10	1	
013	Gland bush	X 20 Cr 13	1	
014	Gland flange	19 Mo 3	1	
015	Distance ring	10 CrMo 9 10	1	
016	Ring	X 20 Cr 13	1	
017	Stud	21 CrMoV 5 7	12	
018	Nut	24 CrMo 5	12	
019	Washer	X 39 CrMo 17 1	12	
020	Socket head screw	21 CrMoV 5 7	8	
021		-	-	
022	Washer	X 39 CrMo 17 1	8	
023	Threaded stud	21 CrMoV 5 7	8	
024	Nut	24 CrMo 5	3	
025	Locking plate	X20CrNiMo18143	3	
027		-	-	
028		-	-	
029		-	-	
030	Socket head screw	X 22 CrMoV 12 1	16	
031	Guide bush	10 CrMo 9 10	1	
032			-	
033			-	
034	Spiral gasket	Graphite	1	
035	Spiral gasket	Graphite	2	
036	Packing ring	Graphite	4	
043			-	
044			-	
047	Orifice	A182-F22	1	
110	Yoke	Casting	1	
111	Actuator	ASM	1	
112			1	

208276
208277
208278

Main element

Design code	EN 12516-2
Design press	184 / 47 barA
Design Temp.	544 / 483°C
Nuclear class	No
Hydrotest pressure	306 / 71 bar
Max. Kv at 100% stroke	784.25
Max seat leakage	6.89 cc / min at 127 bar

Actuator

Type	GGI Hydraulic
Supply	16 MPa
Signal	4-20 mA
Increasing signal	opens valve
Size	ASM 250-10
Failure position	In position
Nominal stroke	120±3 mm
Stroke time modulating	10 - 15 sec
Valve and actuator weight	2400 kg

Date
Engineering

Notes

1. Valve orientation to be stem and actuator vertical, outlet horizontal
2. Water connection to be horizontal
3. All dimension are in mm
4. Seat leakage per ANSI/FCI 70.2 Class V
5. Tagging to include design pressure/ temp.
6. All dimensions without stated tolerances are for reference only
7. Assembly 103.233.808.500

Ref. valve assy 103.233.808.200

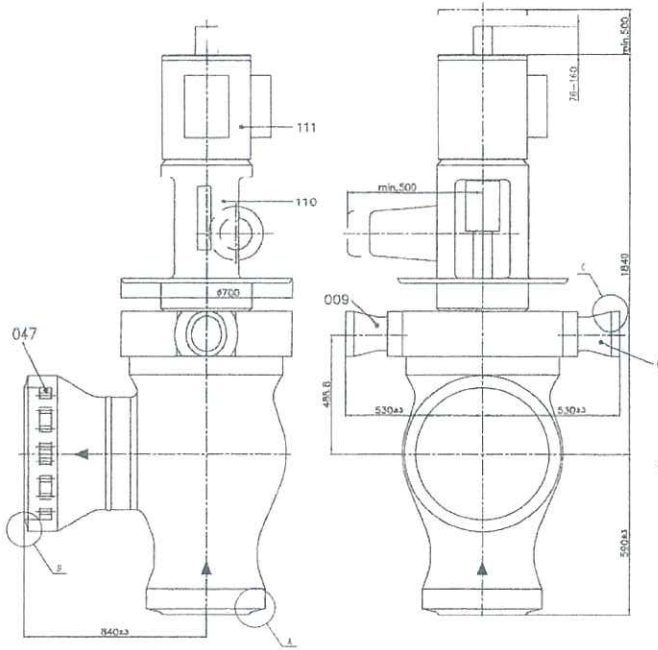

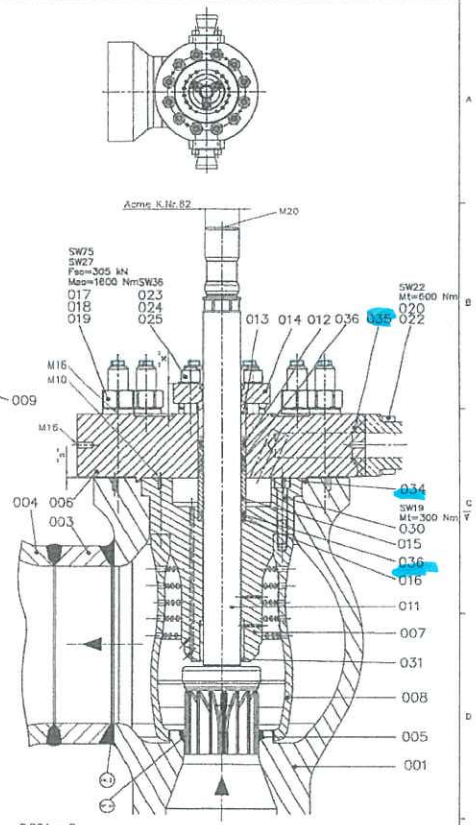

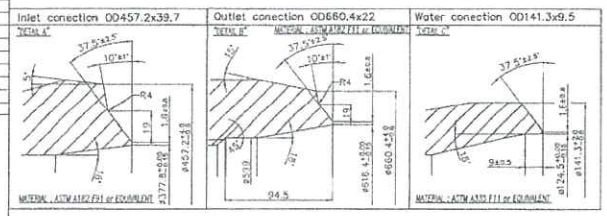

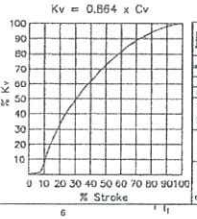

Operating condition of HP turbine bypass system

Units	Fluid : Steam	Case 1	Case 2	Case 3	Case 4	Case 5	Case 6
kg/h	Flow rate	200000	200000	200000	570177	285080	793750
bar	Press. inlet	61.01	61.01	109.01	109.01	109.01	167.01
bar	Press. outlet	9.65	9.65	9.65	10.92	10.57	40.80
°C	Temp. inlet	380	430	460	530	630	658
°C	Temp outlet	310	310	310	310	310	310

EQUIPMENT NUMBER	
UNIT 3	UNIT 4
363-PC010	463-PC010

Tanjung Jati DRE 180 C

HP Bypass steam control

Top assembly

NC | D | A1 | 202418-1CH

FINAL

P. T. CENTRAL JAVA POWER
TANJUNG JATI 'B' COAL-FIRED POWER STATION
UNITS 3 & 4 2 x 660MW (NET)

SUMITOMO CORPORATION

A-HPB-M-TS-3169 Rev. 0

ORG-C007272 NOS-C511271

OUTLINE AND ASSEMBLY DRAWING OF HP TURBINE BYPASS VALVE TANJUNG JATI B EXPANSION 2 x 660MW POWER PROJECT

TOSHIBA 株式会社東芝 TOSHIBA CORPORATION

1KT110501 (B)

1KT110500 LPBV OUTLINE

PL分離 1

Parts List

Fig.	Name	Material	QTY	Remarks
001.1	Valve body	A217 WC9	1	
001.2	Outlet nozzle	A387 22Cl.2	1	
001.3	Outlet cage	A335 P22	1	
001.4	Cover	A182 F22	1	
001.5	Ellptical head	A387 22Cl.2	1	
001.6	Inlet nozzle	A182 F22	1	
004	Valve seat	X 20 CrMoV 12 1	1	
006	Bonnet	A182 F22	1	
008	Inlet cage	10 CrMo 9 10	1	
010	Valve stem	Inconel 718	1	
013	Gland bush	400 S.S.	1	
014	Packing flange	10 CrMo 9 10	1	
015	Packing spacer	Carbon	1	
016	Piston ring	Inconel	2	
017	Bolt	X22 CrMoV 12 1	24	
018	Nut	21 CrMoV 5 7	24	
019	Washer	X 39 CrMo 17	24	
021	.	.	.	
022	.	.	.	
023	Threaded stud	21 CrMoV 5 7	3	
024	Nut	25 CrMo 5	3	
025	Locking plate	X2CrNiMo18143	3	
030				
034	Packing ring	Graphite	1	
035	Packing ring	Garlock	1	
036	Packing ring	Graphite	1	
037				
049	Spray water nozzle	11 CrMo 9 10	4	
050	.	.	.	
057	Manifold	16 Mo 3	1	equivalent to A335GrP11
066	Plug	X 20 CrMoV 12 1	1	
073	Threaded stud	24 CrMo 5 7	24	
074	Nut	24 CrMo 5 7	24	
075	Washer	X 35 CrMo 17	24	
104	Packing ring	Graphite	8	
110	Yoke	Casting	1	
111	Actuator	GHZ 80/30-330	1	
120	Cover	13 CrMo 44	4	
121	Nozzle holder	13 CrMo 44	4	

215208

208287
208288
208289

Main element

Design code	EN 12516-2
Design press.	45 / 13 barA
Design Temp.	540 / 536℃
Nuclear class	No
Hydrotest pressure	67.5 / 19.5 bar
Max. Kv at 100% stroke	4654
Seat leakage pressure	30.6 bar
Max seat leakage	4.35 cc/min

Actuator

Type	Hydraulic
Supply	11.7–16 MPa
Signal	4–20 mA
Increasing signal	Opens valve
Size	GHZ 80/30-330
Failure position	In place
Nominal stroke	300 mm
Stroke time	open 10–15s, close 10–15s trip 3s
Valve weight	4500 kg

Engineering Data

Notes

1. Valve orientation to be stem and actuator vertical
2. Model type: NBSE 60-700-2
3. All dimension are in mm
4. Seat leakage per ANSI/FCI 70.2 Class V
5. Tagging to include design pressure/ temp.
6. All dimensions without stated tolerance are for reference only
7. Assembly drawing 103.233.844.500

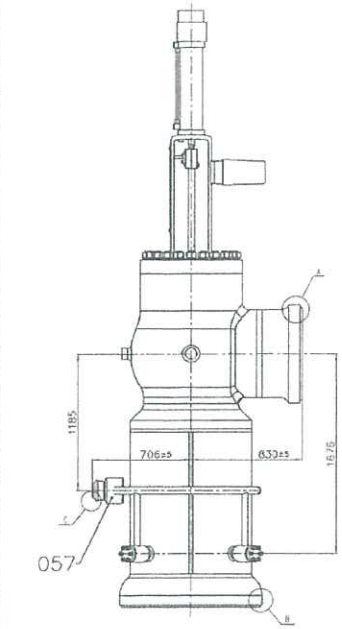

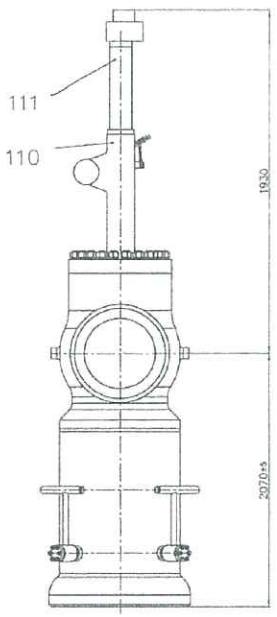

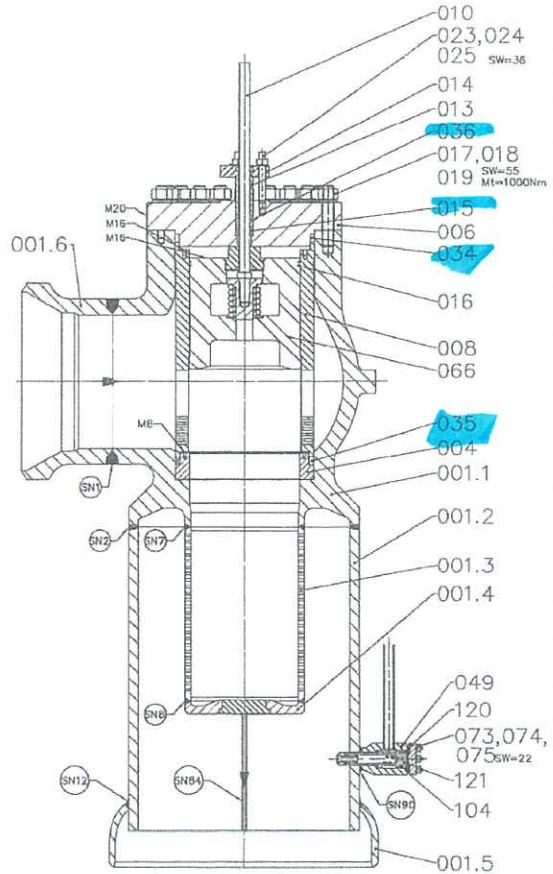

Inlet pipe connection	Outlet pipe connection	Water pipe connection
DETAIL A' OD711.2x35	DETAIL B' OD1016x16	DETAIL C' OD141.3x5.85

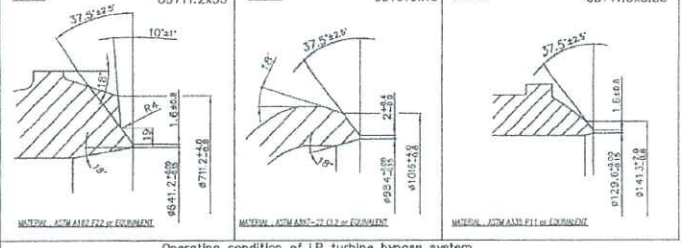

MATERIAL : ASTM A182 F22 or EQUIVALENT

MATERIAL : ASTM A387-22 Cl.2 or EQUIVALENT

MATERIAL : ASTM A335 P11 or EQUIVALENT

Operating condition of LP turbine bypass system

Units	Fluid : Steam	Case 1	Case 2	Case 3	Case 4	Case 5
bar	Valve Inlet Press.	9.51	9.51	9.51	9.51	37.6
℃	Valve Inlet Temp.	340	400	538	538	538
kg/h	Valve Inlet Flow	101809	106588	265287	244498	473208
bar	Valve Outlet Press.	1.36	1.48	4	3.69	7
℃	Valve Outlet Temp.	200	200	200	200	200

Kv = 0.864 x Cv

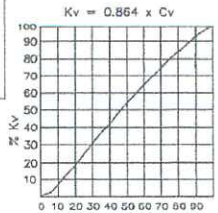

EQUIPMENT NUMBER	UNIT 3	UNIT 4
LP BYP A	3LAB-FC001A	4LAB-FC001A
LP BYP B	3LAB-FC001B	4LAB-FC001B

3	Inlet connection changed from OD711.2x35.6 to OD711.2x35 / Outlet connection changed from OD1016x15.3 to OD1016x16 / Design temp. outlet changed to 536℃		
D	SCHMID_R	SAKAMOTO_N	SCHUCH_CH
C	WEBER_D	MIKUSCH_M	SCHUCH_CH
B	SCHUCH_CH	LUDWIG_R	

Tanjung Jati NBSE 60-700-2

LP Steam control valve

Top Assembly

NG

D | A1 | 202418-7CH | 1-1 b

FINAL

P.T. CENTRAL JAVA POWER
TANJUNG JATI B COAL FIRED POWER STATION
UNITS 3 & 4 2 x 660MW (NET)

SUMITOMO CORPORATION

A-LPBT-M-TS-3172

DRS-C007972 NDS-C511270

OUTLINE AND ASSEMBLY DRAWING OF LP TURBINE BYPASS VALVE TANJUNG JATI B EXPANSION 2 x 660MW POWER PROJECT

TOSHIBA 東芝 TOSHIBA CORPORATION

1KT110500 (B)

BOM HV200AS

Pos.	Description	Partnumber	Qty.
1	Internal gear pump	000.101.008.233	2
2	Flange	000.101.009.269	2
3	Coupling	103.169.319.001	2
4	Electric motor	-	2
5	Oil-level gauge	000.003.195.095	1
6	Air filter	000.003.124.110	1
7	Temperature gauge	000.003.180.005	1
8	Temperature sensor L= 400mm	000.101.007.058	1
9	Level sensor L=472mm	000.101.007.060	1
10	Filter unit	000.101.000.361	1
10.1	Electric motor to Filter unit	-	1
10.2	Pump to filtration unit	000.101.004.469	1
10.3	Filter cartridge	000.101.007.795	1
10.4	Clogging indicator	000.101.006.377	1
11	Oil-air cooler	000.101.008.972	1
12	Accumulator 50l	000.101.009.888	1
12.1	Accumulator bladder 50 l	000.003.106.005	1
13	Control box	-	1
14	Heating element	Optional	1
15	Manifold	103.226.760.260	1
15.1	Manifold equiped	103.226.760.261	1
16	Accumulator charging valve	000.101.008.337	2
17	Pressure-reducing cartridge	000.101.007.951	1
18	Pressure relief cartridge	000.003.195.046	1
19	Pressure relief cartridge	000.101.001.444	1
20	discharge cock	000.101.008.546	1
21	"Minimess" Screw coupling M14x1.5	000.003.195.080	1
22	Pressure sensor 0...250bar	000.101.007.059	1
23	Pressure gauges 32MPa	000.003.144.028	1
24	Pressure gauges 25MPa	000.003.144.027	1
25	Pressure-reducing cartridge	000.003.195.049	1
26	Manifold D	103.169.345.209	1
28	Hose ND8 / ND 10 (221483)	000.101.006.310	2
29	Hose ND20	000.101.000.836	2
35	Sealing set	103.226.760.290	1

HV200AS

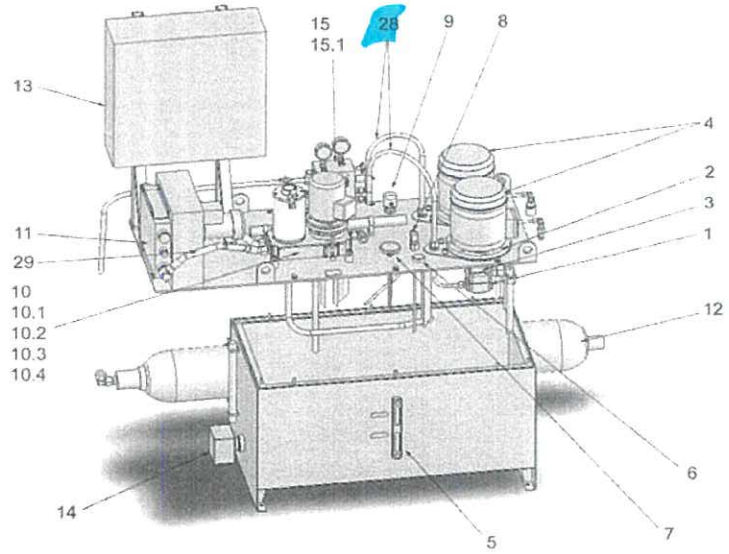

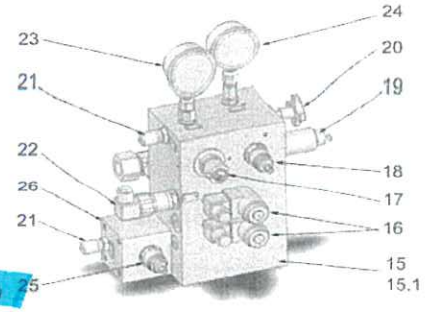

000.003.195.560

31.08.2011 RW

BOM HV200AS.xls

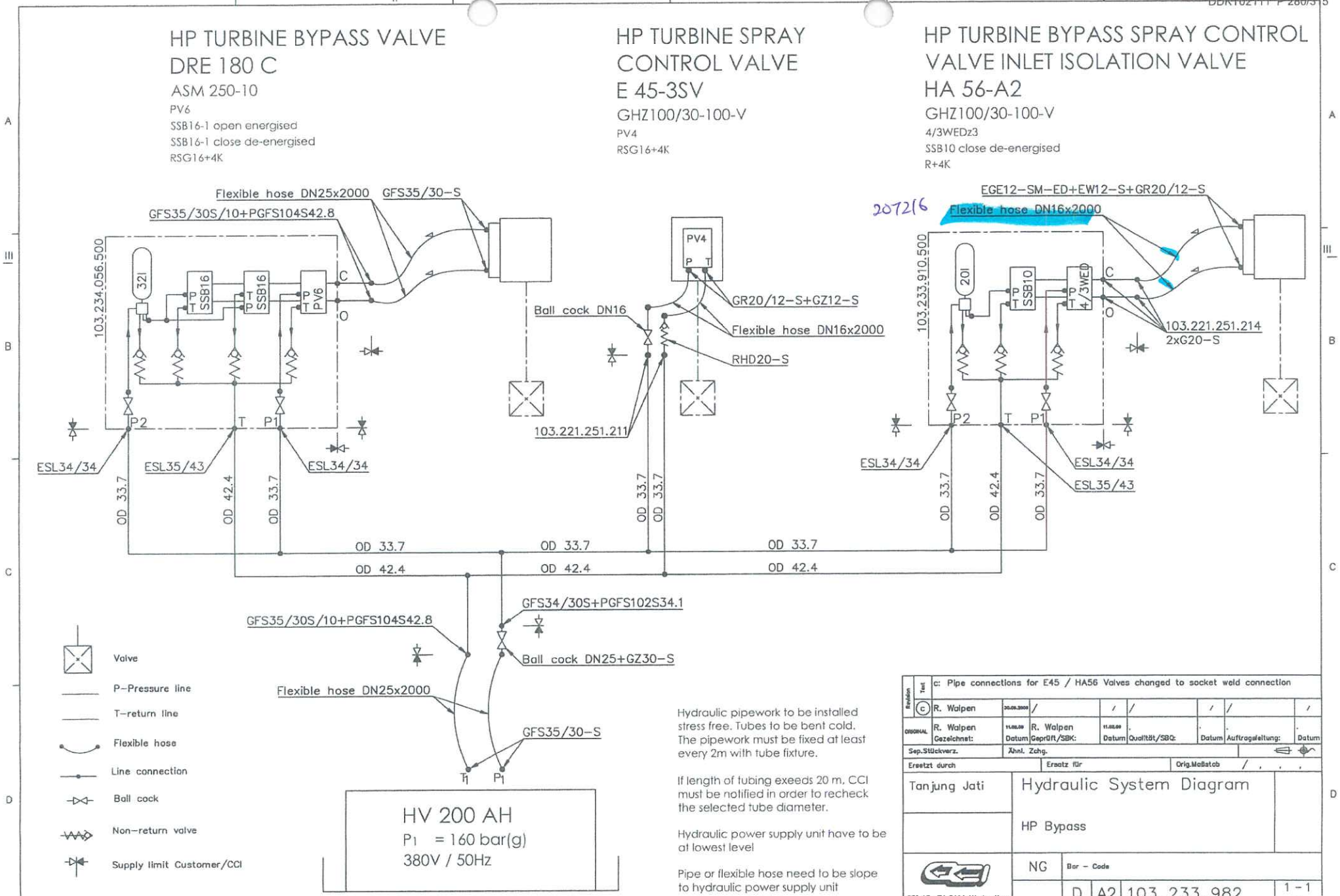
HP TURBINE BYPASS VALVE
DRE 180 C
ASM 250-10
PV6
SSB16-1 open energised
SSB16-1 close de-energised
RSG16+4K
HP TURBINE SPRAY CONTROL VALVE
E 45-3SV
GHZ100/30-100-V
PV4
RSG16+4K
HP TURBINE BYPASS SPRAY CONTROL VALVE INLET ISOLATION VALVE
HA 56-A2
GHZ100/30-100-V
4/3WEDz3
SSB10 close de-energised
R+4K
Flexible hose DN25x2000
GFS35/30-S
GFS35/30S/10+PGFS104S42.8
103.234.056.500
32l
SSB16
PV6
C
O
P2
T
P1
ESL34/34
ESL35/43
OD 33.7
OD 42.4
PV4
P T
Ball cock DN16
GR20/12-S+GZ12-S
Flexible hose DN16x2000
RHD20-S
103.221.251.211
EGE12-SM-ED+EW12-S+GR20/12-S
207216
Flexible hose DN16x2000
103.233.910.500
20l
SSB10
4/3WED
103.221.251.214
2xG20-S
GFS34/30S+PGFS102S34.1
Ball cock DN25+GZ30-S
GFS35/30-S
Valve
P-Pressure line
T-return line
Flexible hose
Line connection
Ball cock
Non-return valve
Supply limit Customer/CCI
HV 200 AH
P1 = 160 bar(g)
380V / 50Hz
Hydraulic pipework to be installed stress free. Tubes to be bent cold. The pipework must be fixed at least every 2m with tube fixture.
If length of tubing exeeds 20 m, CCI must be notified in order to recheck the selected tube diameter.
Hydraulic power supply unit have to be at lowest level
Pipe or flexible hose need to be slope to hydraulic power supply unit
c: Pipe connections for E45 / HA56 Valves changed to socket weld connection
R. Walpen
R. Walpen
Gezeichnet:
Datum
Geprüft/SBK:
Qualität/SBQ:
Auftragsleitung:
Sep.Stückverz.
Ähnl. Zchg.
Ersetzt durch
Ersatz für
Orig.Maßstab
Tanjung Jati
Hydraulic System Diagram
HP Bypass
NG
Bar - Code
CCI AG, CH-8404 Winterthur
D
A2
103.233.982
1 - 1
c

LP TURBINE BYPASS VALVE A
NBSE 60-700
GHZ80/30-330-V-F
PV6
SSB10 close de-energised
RSG16+4K

LP TURBINE BYPASS VALVE B
NBSE 60-700
GHZ80/30-330-V-F
PV6
SSB10 close de-energised
RSG16+4K

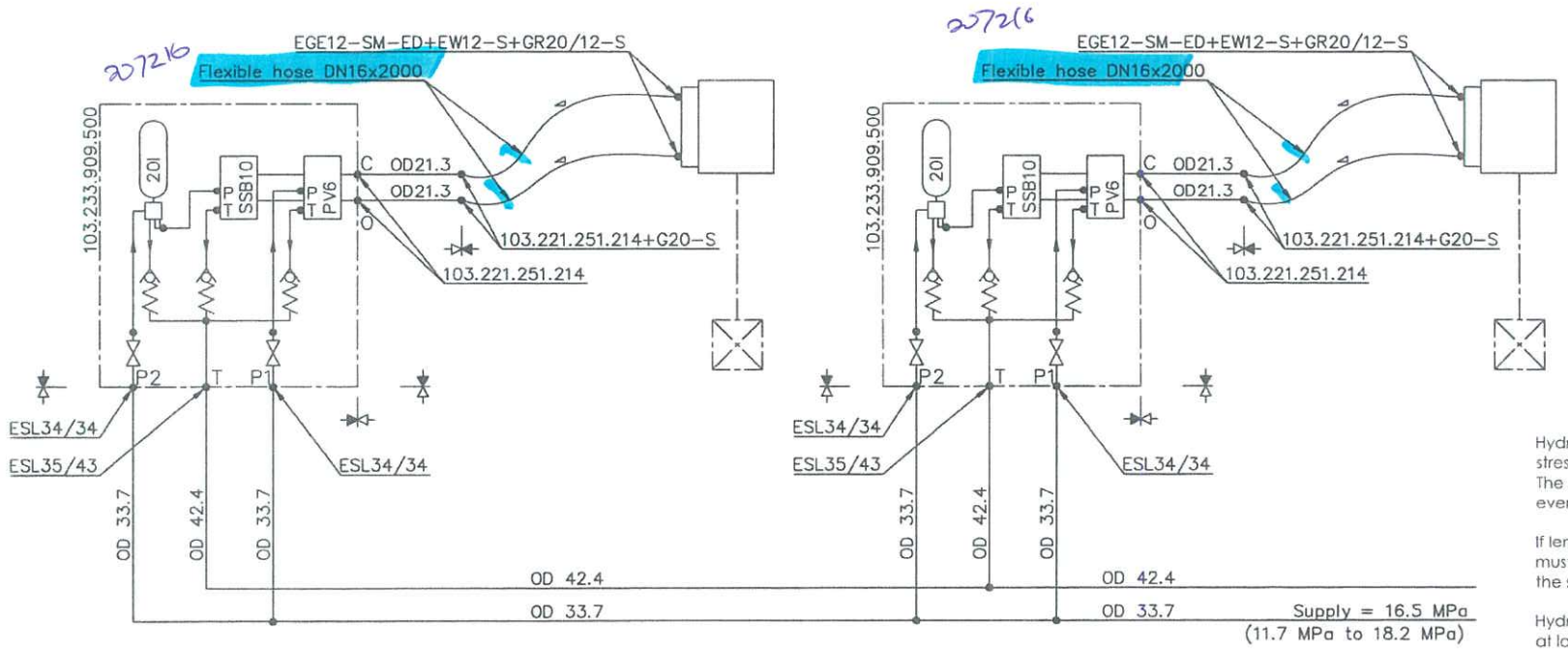

Hydraulic pipework to be installed stress free. Tubes to be bent cold. The pipework must be fixed at least every 2m with tube fixture.

If length of tubing exeeds 20 m, CCI must be notified in order to recheck the selected tube diameter.

Hydraulic power supply unit have to be at lowest level

Pipe or flexible hose need to be slope to hydraulic power supply unit

- Valve
- P–Pressure line
- T–return line
- Flexible hose
- Line connection
- Ball cock
- Non–return valve
- Supply limit Customer/CC

Revision	Tel	b: Changed to socket weld connections						
	b	R. Walpen	30.08.2006	/	/	/	/	/
ORIGINAL		R. Walpen Gezeichnet:	11.05.00 Datum	R. Walpen Geprüft/SBK:	11.05.00 Datum	Qualität/SBQ:	Datum	Auftragsleitung: Datum
Sep.Stückverz.		Ähnl. Zchg.						
Ersetzt durch		Ersatz für				Orig.Maßstab	/	

Tanjung Jati

Hydraulic System Diagram

LP Bypass

CCI AG, CH-8404 Winterthur

NG | Ber – Code

D | A2 | 103.233.983 | 1 – 1 b

図面番号 DRAWING NO. F1.2KT115946 | REV. B | TITLE (ABBR) HP TBV SPRY CONT VLV | REMARKS 5 | PREP FA | MF 2

MODEL CODE CJC*, XIT03, HP-TBV, C,

普通許容差ハ下記ニヨル 金属削り KDAA3521 溶接品 ガス切断 KDAA3524

PL分離 1 枚

コノ図面ニ指定スル規格・標準類ハ、発行年・変更記号ノ指示ナイモノハ最新版ヲ適用スルコト

Parts List

Pos.	Name	Material	QTY	Remarks
001	Valve body	G 20 Mo 5	1	
002	Transition piece	A105	2	
003	.	.	.	
004	Vealve seat	X 17 CrNi 16 2	1	
005	.	.	.	
006	.	.	.	
007	Bonnet	10 CrMo 9 10	1	
008	Jet cage	X20CrMoV121	1	
009	.	.	.	
010	Valve stem	17-4 PH	1	
012	Ring	X 20 Cr 13	1	
013	Gland bush	X 20 Cr 13	1	gas nitrided
014	Gland flange	15Mo3	1	
015	.	.	.	
017	.	.	.	
018	.	.	.	
019	.	.	.	
020	Socket head screw	21CrMoV57	12	
021	.	.	.	
022	Washer	X30CrMo17 1	12	
023	Threaded stud	21CrMoV57	3	
024	Nut	25CrMo4	3	
025	Locking plate	X20CrNiMo18143	3	
027	.	.	.	
028	.	.	.	
029	.	.	.	
030	.	.	.	
031	.	.	.	
032	.	.	.	
033	.	.	.	
034	Packing ring	Graphite	2	
035	Packing ring	Graphite	4	
036	.	.	.	
043	.	.	.	
044	.	.	.	
045	.	.	.	
110	Yoke	Casting	1	
111	Actuator	Hydraulic	1	
112	.	.	.	

107278

Engineering Data

Main element

Design code	EN 12516-2
Design press.	233 barA
Design Temp.	194°C
Nuclear class	No
Hydrotest pressure	350 bar
Max. KV at 100% stroke	23.51
Max seat lekage pressure	96 bar
Max seat lekage	1.3 oz/min

Operator

Type	CCI Hydraulic
Supply	16 MPa
Signal	4–20 mA
Increasing signal	open
Size	OH2100/30-100-V
Failure position	fail in place
Nominal stroke	45 mm±2
Stroke time	10 s
Valve and operator weight	212 kg

Notes

1. Valve orientation to be stem and actuator vertical up
2. Model no: E 45 3SV
3. All dimension are in mm
4. Seat leakage per ANSI/FCI 70.2 Class V
5. The inlet and outlet shell face horizontal.
6. Assembly drawing: 103.233.923.200

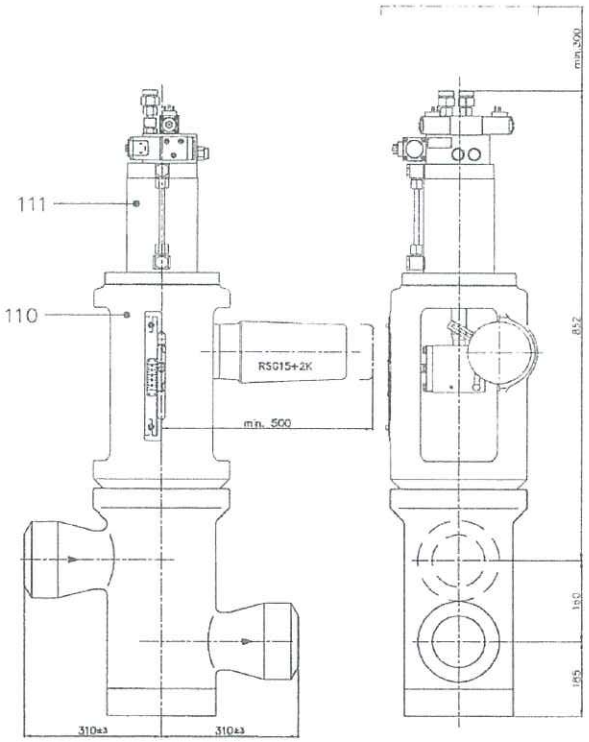

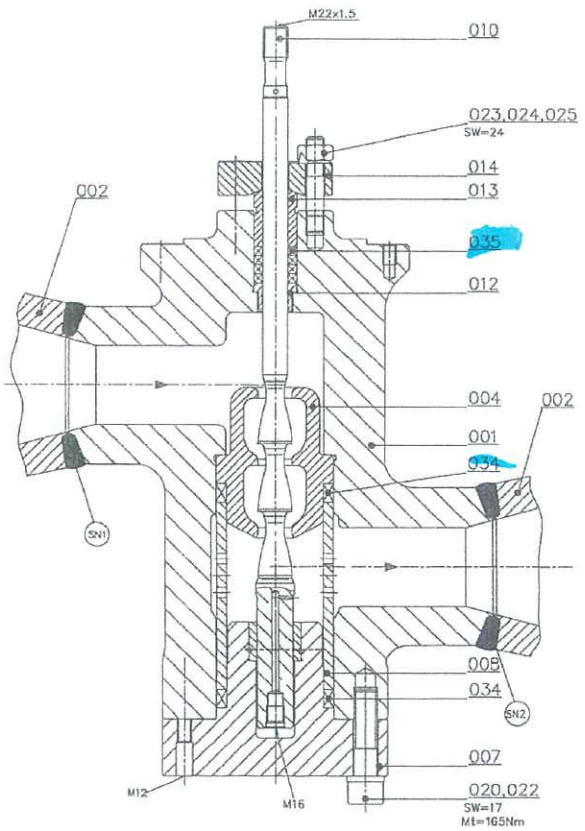

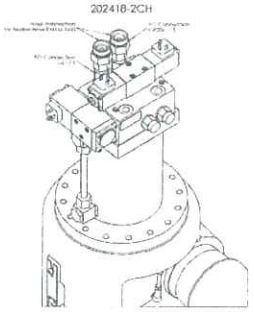

Inlet connection OD168.3x19.65	Outlet connection OD168.3x19.65
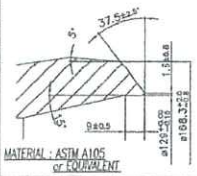	same as inlet

MATERIAL : ASTM A105 or EQUIVALENT

EQUIPMENT NUMBER	
UNIT 3	UNIT 4
3ATT-TCV003	4ATT-TCV003

FINAL

Operating condition of HP turbine bypass system

Units		Case 1	Case 2	Case 3	Case 4	Case 5	Case 6
	Fluid : Steam	Cold	Cold	Hot	Boiler	House	Max
kg/h	flow rate	3617.91	12885.09	13179.20	81332.82	41983.52	146667.94
bar	Press. inlet	62.50	52.48	110.48	113.81	115.22	198.44
bar	Press. outlet	14.01	14.73	14.76	54.83	24.77	111.40
°C	Temp. inlet	72.7	0.0	72.7	110.0	110.1	172.7

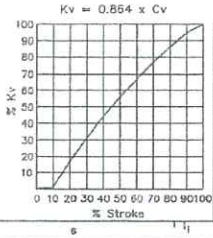

View of the actuator updated

3	SCHMID_R	11.06.08	SCHUCH_CH	11.06.08	SALAMONE_M	11.06.08	
ORIGINAL	BRUNNER_R 12.12.08 Datum	12.12.08 Datum	12.12.08 Datum	12.12.08 Datum	LUDWIG_R 12.12.08 Datum	12.12.08 Datum	

Tanjung Jati E45-3SV

HP Spraywater control valve

Top assembly

CCI AB, CH-8246 Winterthur

NG | D | A | 202418-2CH | 1-1 g

P. T. CENTRAL JAVA POWER
TANJUNG JATI 'B' COAL-FIRED POWER STATION
UNITS 3 & 4 2 x 660MW (NET)
SUMITOMO CORPORATION

A-LPB-M-TS-3174 R

DRS-C007972	NDS-C510941		
H. Hosaka SEP.-13-'10	承認 APPROVED BY	承認 APPROVED BY T. Endo SEP.-02-'09	調査 REVIEWED BY /
H. Hosaka SEP.-13-'10	調査 REVIEWED BY	尺度 SCALE 1:8 / 調査 REVIEWED BY T. Endo SEP.-02-'09	担当 PREPARED BY T. Tanaoki SEP.-02-'09
T. Tanaoki SEP.-13-'10	担当 PREPARED BY	単位 UNITS mm	
B - XIT03	REV. 版所		
REREASED FOR FINAL DRAWING.	記事 CONTENTS		

REVISIONS

名称 TITLE: OUTLINE AND ASSEMBLY DRAWING OF HP TURBINE BYPASS VALVE SPRAY CONTROL VALVE TANJUNG JATI B EXPANSION 2 x 660MW POWER PROJECT

TOSHIBA 株式会社東芝 TOSHIBA CORPORATION

図面番号 DRAWING NO. 2KT115946 REV. MARK B

T 保管 REGISTERED 承認 SEP.-13-'10 電子承認システム適用

図面番号 DRAWING NO. F1 2KT116190

TITLE (ABBR) B1 BV SPRY ISOL VLV

MODEL CODE C.J.O.**. X.1.T.03. HP-T.B.V. C.

REMARKS 5 FA. REV. B1 PREF 2 MF

PL分離 1 枚

2KT116190 B

Parts List

Pos.	Name	Material	QTY	Remarks
001	Valve body	1.20 Mo 5	1	
002	Transition piece	A105	2	
004	Valve seat	X 17 CrNi 16 2	1	
005				
006				
007	Bonnet	15 Mo 3	1	
008	Jet vane	X 20 CrMoV 12 1	1	
009				
010	Valve stem	17 4-PH	1	
012				
013	Gland bush	X 20 Cr 13	1	
014	Gland flange	10 CrMo 9 10	1	
016	Distance ring	X 20 Cr 13	1	
017	Socket head screw	21 CrMoV 5 7	16	
018				
019	Washer	X 39 CrMo 17 1	16	
020				
021				
022				
023	Threaded stud	21 CrMoV 5 7	3	
024	Nut	25 CrMo 4	3	
025	Locking plate	X2CrNiMo18143	3	
026	Socket head screw	21 CrMoV 5 7	12	
028				
029	Washer	X 39 CrMo 17 1	12	
030				
031				
032				
033				
034	Packing ring	Graphite	1	
035				
036	Packing ring	Graphite	4	
037	Packing ring	Graphite	1	
038				
092	Yoke ring	15 Mo 3	1	
110	Yoke	carbon steel	1	
111	Actuator	ASM	1	
112				
113				

107272

Main element

Design code	EN 12516-2
Design press./Temp.	233 barA / 194°C
–	–
Nuclear class	No
Hydrotest pressure	350 bar
Max. Kv at 100% stroke	103.29
–	–
Max seat leakage	0.4 ccm/min @ 2.4 bar
Bonnet flg. bolt torque	450 Nm

Actuator

Type	CG Hydraulic
Supply	16 MPa
Signal	4–20 mA
Increasing signal	open and closed valve
Size	CHZ100/30-100-V
Failure position	fail in place
Nominal stroke	60 mm
Stroke time	40sec
Valve and actuator mass	approx 320kg

Engineering Data

Notes

1. Valve orientation to be stem and actuator vertical up
2. Model no: HA 56 A2
3. All dimension are in mm.
4. Seat leakage per ANSI/FCI 70.2 Class V
5. All dimensions without stated tolerances are for reference only
6. Assembly drawing: 103.233.930.200

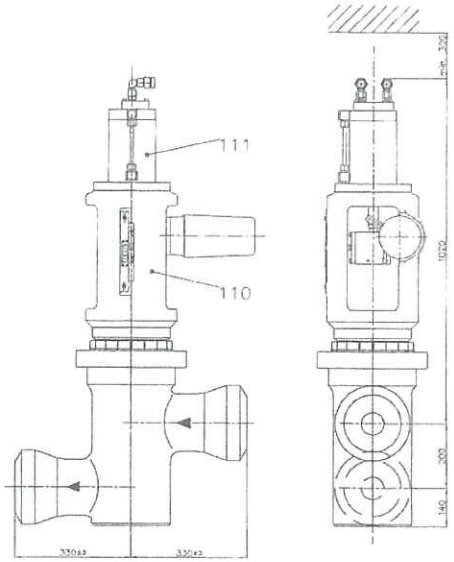

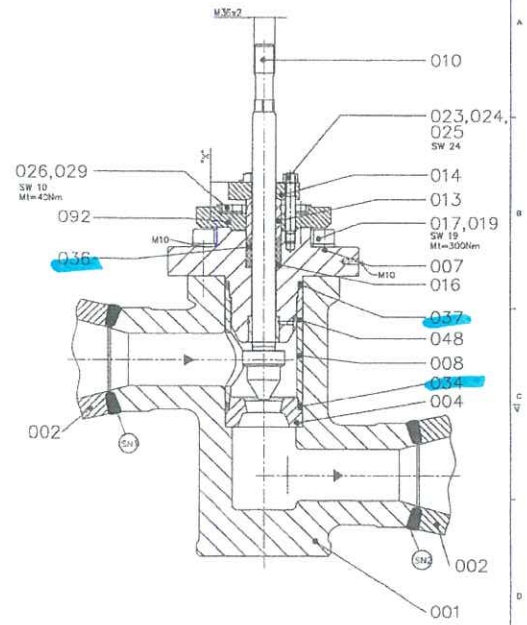

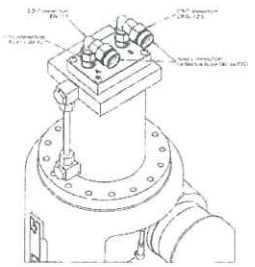

EQUIPMENT NUMBER	
UNIT 3	UNIT 4
3ATT-HV001	4ATT-HV001

Inlet connection OD168.3x19.65	Outlet connection OD168.3x19.65
MATERIAL : ASTM A105 or EQUIVALENT	same as inlet

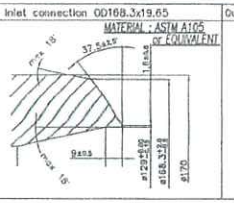

Operating condition of HP turbine bypass system

Units	Fluid : Water	Case 1 Cold	Case 1 Cold	Case 1 Hot	Case 1 Boiler	Case 1 House	Case 1 Max
kg/h	Flow rate	3617.91	12885.09	13178.20	81332.82	41983.52	146667.94
bar	Press. inlet	62.5	62.5	110.5	114.5	115.4	200.6
bar	Press. outlet	62.50	62.48	110.48	113.81	115.22	198.44
°C	Temp. inlet	72.7	72.7	72.7	110.0	110.1	172.7
°C	Temp. outlet	–	–	–	–	–	–

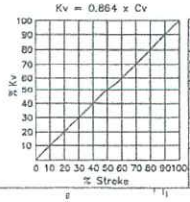

View of the actuator symbolic

3	SOHMD_R	SOHGH_CH	SALMONIE_M	
	BRUNNE_R	SOHGH_CH	LUDWIG_R	

Tanjung Jati HA56-A2

HP Spraywater isolation valve

Top assembly

ACAD

D A 202418-3CH 1/1

FINAL

P. T. CENTRAL JAVA POWER
TANJUNG JATI 'B' COAL-FIRED POWER STATION
UNITS 3 & 4 2 x 660MW (NET)
SUMITOMO CORPORATION

A-LPB-M-TS-3175 B

DRS-C007972	NDS-C510941	承認 APPROVED BY T. Endo SEP.-02-'03	調査 REVIEWED BY /
H. Hosaka SEP.-13-'10	承認 APPROVED BY	尺度 SCALE 1:10	調査 REVIEWED BY T. Endo SEP.-02-'03
H. Hosaka SEP.-13-'10	調査 REVIEWED BY	単位 UNITS mm	担当 PREPARED BY T. Tanaoki SEP.-02-'03
T. Tanaoki SEP.-13-'10	担当 PREPARED BY		
B – XIT03 REREASED FOR FINAL DRAWING.	REV. 番号 / 記事 CONTENTS		

名称 TITLE: OUTLINE AND ASSEMBLY DRAWING OF HP TURBINE BYPASS VALVE SPRAY CONTROL VALVE INLET ISOLATION VALVE
TANJUNG JATI B EXPANSION 2 x 660MW POWER PROJECT

TOSHIBA 株式会社東芝 TOSHIBA CORPORATION

図面番号 DRAWING NO. 2KT116190 REV. MARK B

T 保管 REGISTERED 承認 SEP.-13-'10

電子承認システム適用

1. CONTRACTOR SAFETY PLAN

Prior to beginning work, Contractor shall prepare and submit Contractor's Health and Safety Plan to HSE of KPJB according to Site Safety Rule and KPJB Policies. Contractor shall submit the following requirements:

2.1. Copy of signed PO/Work Order/Appointment Letter.

2.2. Company Permit or License by Government.
For special work (such as: underwater, radiography), contractor shall be completed with valid Company Permit or License by Government.

2.3. Work Instruction/Standard Operating Procedure (SOP).

2.4. Contractor should prepare work instruction or SOP which are detailed steps of how to conduct a specific job task and approved by KPJB Engineer's Representative.

2.5. Organization Chart.
Contractor should prepare Organization Chart including contact number of related personnel involved on project.

2.6. Schedule of Project.
Contractor should prepare work schedule approved by KPJB's Engineer Representative. In case there are any changes, updated schedule should be submitted.

2.7. List of Manpower.
- The contractor attaches list of workers and copy of workers' ID involved on the project (KTP/SIM). Copy of Passport, Working Visa for Expatriate workers.
- Minimum age of worker is 17 years old.
- SKCK (Police record) is required during Maintenance and Planned Outage of KPJB.

2.8. Health Statement Letter.
Hospital Record/Health Statement Letter from Hospital or *Puskesmas* is required for all involved workers; with statement letter's minimum validity is 1 (one) month.

2.9. Insurance.
All workers must be protected by insurance, at least BPJS *Ketenagakerjaan* and/or BPJS *Jasa Konstruksi* for certain time and specific work contract, complete with its payment evidence.

2.10. Personnel Competency and Certification.
Copy of workers' certificate shall be attached in accordance with the provisions:
- Driver License: SIM A, B, C.
- Operator License: forklift, lifting, gondola, rigger, crane, radiography.
- Welder.
- Scaffolding technician/operator and supervisor.

2.11. List of PPE, Tools and Emergency Equipment.
- Contractor is required to identify and prepare appropriate PPE. PPE must be in accordance with applicable standards and conditions in KPJB.
- Contractor shall provide safe and feasible tools and equipment's based on contract and scope of work.
- Contractor shall provide safety line/barricade, and safety sign refer to hazard identification.
- Contractor shall prepare emergency equipment to assist handling in certain conditions, i.e.: first aid box and initial fire handling, and so on.

2.12. Drawing / P & ID Diagram.
Contractor shall prepare project drawings or equipment's which have been approved by KPJB's Engineer Representative.

2.13. Risk Assessment.
Contractor shall conduct risk assessment and specific hazard control of conducted work in form of Job Safety Analysis (JSA). This document shall be approved by KPJB Engineer's Representative and HSE. JSA Document shall be informed to all involved workers.

2. SAFETY INDUCTION

2.1. Contractor shall ensure that all works have obtained KPJB's Safety Induction.

2.2. Safety Induction is conducted only after all Health and Safety Plan requirements have been fulfilled. Safety Induction is conducted based on designated schedule by KPJB's HSE.

2.3. Workers which have attended Safety Induction will get "Pass Safety Induction" sticker to easily identify.

3. PERSONAL PROTECTIVE EQUIPMENT

The contractor shall provide Personal Protective Equipment and long sleeve wear pack with contractor identification. Personal Protective Equipment shall be complying with relevant and applicable standards, including:

3.1. Safety helmets with chin strap, long sleeve wear pack/vests, safety shoes, and industrial safety glasses. Safety helmet color regulation in KPJB is:

Red	HSSE
Blue	Technical Advisor
Yellow	Contractor

3.2. Fall protection, safety body harness double hooks should be used for contractor's work in height risk or falling hazards area.

3.3. Other items of personal protective equipment shall be worn as required by risk assessment.

4. SECURITY AND ACCESS CONTROL

4.1. Enter and Exit access to Tanjung Jati B unit #3&4 Site is via Post Main Gate (PLN) and Security 2nd Gate (KPJB).

4.2. Contractors shall conduct registration for:

Yellow Visitor	Permitted only on Admin Building area;
Red Visitor	Permitted to enter site accompanied by KPJB's Employee (not permitted to conduct any works);
Workers' ID Card	Permitted to enter site and work according to approved PO

4.3. Enter and Exit is permitted only in Daily working hour (Monday to Friday from 07.30 until 16.30).
4.4. Contractor shall apply Notification of Overtime which approved and signed by PLN and KPJB for any works conducted outside daily working hours.
4.5. For works which conduct in 24 hours' time schedule, Contractors shall regulate it into shift work system.
4.6. Contractor is permitted to enter the site only if have fulfilled following items:
- In a good/healthy condition.
- Attended Safety Induction,
- Obtain and/or change over the ID,
- Wearing proper PPE,

4.7. In case that Contractor need to enter or passing other Units aside from KPJB, they need to inform KPJB's HSE Division and follow the applicable procedures.
4.8. All vehicles must meet the requirements of applicable State Laws concerning safe operation (i.e. driver license, brakes, lights, etc.).
4.9. All personal cars must be parked in designated parking area, which is PLN parking area.
4.10. Three wheels, pickup, and other such vehicles are prohibited from being used to transport of people.
4.11. All vehicles shall be driven at speeds not to exceed the posted speed limit (20 km/h).
4.12. All entry and exit material shall be carried to KPJB Procedure's KPJB-0956-10 Security Procedure:
- All entry materials to KPJB should be completed with Delivery Instruction / PO / Delivery Order,
- All exit materials should be completed with Material Gate Pass,
- Documents and materials will be checked by Security Post Main Gate (PLN) and Security 2nd Gate (KPJB),
- Material entry and exit to/from KPJB should be on daily working hour Monday to Friday 08.00 until 15.00. In case material in/out is not in daily working hour, contractor should prepare notification.

4.13. Contractor shall be submissive and obedient to KPJB and PLN's applicable Security procedure.
4.14. Workers and Visitors are prohibited to carry or conduct: smoking, any weapons, narcotics and alcoholic beverages.

5. MECHANICAL & ELECTRICAL TOOLS

5.1. Contractor must ensure all tools and equipment's must be certified in good and safe condition. All safety devices are installed on all equipment's.
5.2. Contractor ensures equipment's operation shall be in accordance with manufacturer instructions.
5.3. Contractor ensures all broken equipment/tools are tagged or remove from working area so that it will not be used.
5.4. The Contractor's portable lights shall be not more than 50V and provided with transformers.
5.5. Portable Electric Tools and Equipment shall be double pole switched and generally shall be of Very Low Voltage type (less than 110V AC). Alternatively, if it is not possible for Portable Tools and Equipment to operate at Very Low Voltage and they are operated at 220-240V AC then protection by a Residual Current Device (RCD) shall be provided.
5.6. All portable tools and equipment utilized on outdoor construction / installation sites shall be protected by Residual Current Device (RCD).
5.7. RCD's shall be regularly tested to ensure correct operation and shall be provided with a test system for easy testing.
5.8. The Contractor's mechanical & electrical tools shall be registered to Engineer's Representative, and have passed a Portable Mechanical & Electric Tools Test and be suitably tagged before allowed to use on site refers to KPJB Procedures Mechanical Electrical Tools Inspection.
5.9. Installation of leads and cord shall be in proper installed to avoid tripping hazard and run over by vehicle/equipment.
5.10. Prohibited to use double adaptor/plug, piggyback adaptor, and non-industrial electric multi socket (without fuse protection).
5.11. Portable mechanical & electric tools test carried out by KPJB Mechanical & Electrical tools inspector and contractor engineer.
5.12. Portable electric panel distribution board must be equipped with RCD, waterproofing, industrial type plug socket, refers to Indonesian PUIL standard.
5.13. Electric Tools and Equipment that are not in use shall be unplugged and the cables tidied to ensure no tripping hazards.
5.14. If a fuse blows or an RDC is tripped, the Contractor's shall investigate the root cause and report the incident to the Engineer's Representative. If the problem is repeated, the Contractor's personnel shall cease work using the tools and equipment and Contractor's Supervisor shall request an electrician to attend and repair the fault.
5.15. The contractor shall ensure that all gas cylinders for cutting and welding are placed on rack and fitted with suitable Flashback Arresters.
5.16. Lifting tool and lifting tackle shall comply with Indonesian regulation in respect of the examination, test and maintenance record requirements.

6. SAFETY OFFICER / SAFETY MAN

6.1. Contractors are mandatory to appoint Safety Officer/Safety Man which responsible during

period of work to ensure all works are conducted safely and based on procedure. For specific work regulated as follows:

- One safety man for 20 employees is under the control of the contractor (either directly or as sub-contractors). This is also applies into multiples employees amount under control of the contractor.
- Working condition is conducted within 24 hours.
- Working condition which categorized as high risk work such as:
  - Confined space work;
  - Work on flammable area such as on Crusher, Tripper, H2 Plant, and Fuel Oil.
  - Work on hot and high pressure pipe.
  - Under water work.

6.2. The Safety Man / Safety Officer should be:

- Minimum certificated of *AK3 Umum*.
- Understand with the relevant safety, health and environment regulation in Power Plant or Similar Industry.
- Be capable of advising the contractor on the most appropriate control measures and systems of work in order to minimize risk.

7. GENERAL SITE SAFETY

7.1. Contractor is obligated to complete all Permits to Work (PTW) and Safety Permit Form.

7.2. Contractor is obliged to conduct briefing before start working. Risk and potential hazard on working area shall be informed to all workers during briefing session.

7.3. Contractor shall prepare barriers that prevent unauthorized personnel from entering the work site.

7.4. Contractors prepare sign, PPE instruction, and requirements needed to enter the work area.

7.5. Contractor shall ensure machines and equipment are operated only by those who have been authorized and trained.

7.6. Contractor must prepare safe and adequate lighting and ventilation at work site.

7.7. Contractor shall ensure work area clean, tidy and safe. Loose materials, rubbish, tools and equipment placed around the work site shall be kept to a minimum to reduce of hazards.

7.8. Contractor must protect the material/tools from falling while working at height and install warning signs.

7.9. Contractor must ensure no exposed holes be left unattended at any time unless a fence can be erected strong enough to prevent a person falling into the hole.

7.10. Contractor must ensure the walk way and stairways kept clean and free from obstructions. In addition, free access must always be maintained to safety showers, eyewash, and fire protection systems.

7.11. Contractor shall ensure all equipment's/tools shall be inspected periodically and maintained in proper working condition. Any defect must be tagged: "do not use" and remove from service.

7.12. Where the Contractor is required to perform welding, it is responsible for ensuring adequate screens are provided and maintained to protect passers-by from the electric arc and also from spatter produced by the welding process.

7.13. Contractor should equip fire extinguisher at work place as well as should training to easily utilize by any kind of contractor employees.

7.14. Contractor should thoroughly check and make a plan against any gas leakages before and after work prior to in connection with gas work, hermetical place work, welding work, to prevent fire from flammable hazard.

7.15. Contractor should not use firefighting system as any other purposes during work period, such as cleaning, etc.

7.16. KPJB does not permit the smoking of tobacco, in any form, by its workers, contractors in KPJB workplaces. Smoking permitted only in designated / permitted areas.

7.17. Prohibited to take picture and/or video without permission on work location. Picture and video only permitted only for work report.

7.18. Equipment and tools must be returned to their designated storage areas after use.

7.19. Contractor shall be responsible for any damage or loss of the TJB 3&4 asset that is caused by the Contractors, its personnel and its sub-contractors.

7.20. Contractor must complete the Safety Permit Form before performing high risk work, including:

- Confined Space Work
- Welding / Hot Work
- Work at Height
- Lifting Material
- Excavation Work
- Work Surface Water and Under Water
- Radiography
- Work with Chemical Hazard
- Work with Electrical Hazard

8. MATERIAL HANDLING AND STORAGE

8.1. Contractor has responsibility to ensure maximum safety in handling, moving, loading, and unloading materials.

8.2. Special lifting tools shall be operated by authorized as well as competence personnel and based on its function.

8.3. All materials stored in tiers shall be secured to prevent sliding, falling, or collapse.

8.4. Flammable and Combustible Materials shall be stored with due in regard to their fire characteristics. Flammable and combustible material shall only be stored in approved containers and in appropriate quantities for the job site use.

9. HAZARDOUS MATERIALS AND MATERIAL SAFETY DATA SHEETS (MSDS).

9.1. Contractor shall provide a Materials Safety Data Sheet (MSDS) for all chemicals, and lubricants that will be intend to use in the performance of work.
9.2. Contractor shall follow the requirements for storage, handling, and disposal of materials as set by the Engineer's Representative (Chemist/Warehouse/HSE) Division.
9.3. Contractor ensures all chemicals must be stored, labeled, covered or inside at all times in approved containers and labeled as to contents.
9.4. All contractor employees must use proper protective clothing and equipment to prevent contact with hazardous chemicals.

10. DISPOSAL OF HAZARDOUS AND NON-HAZARDOUS WASTE

10.1. Contractor shall be responsible for the correct disposal of all waste generated in undertaking the work.
10.2. Contractor shall analyze any waste generated by his work to identify and determine whether the waste is to be categorized as B3 or not, based on the B3 waste table listed in Government Regulation PP 101 of 2014 concerning B3 waste management.
10.3. Contractor shall handle all B3 class wastes in a proper way that shall not contaminate the environment refer to KPJB Waste Handling Procedure KPJB-0957-03 Waste Management (Hazardous and Non Hazardous) and shall be actively coordinate with Environment Engineers of KPJB HSE Division.

11. SAFETY AND ENVIRONMENT CLEARANCE

Work is considered complete only if contractors have fulfilled following items:

11.1. Conduct Safety Clearance including prepare OSH report covering PTW Clearance, total working hours and Unsafe/Near-miss/Injuries (If any).
11.2. Clean work area from residual work activity including dispose trash/waste accordance with KPJB's Procedure KPJB-0957-03 Waste Management.
11.3. All equipment's, materials and other facilities belong to Contractors shall be immediately removed from working site.

12. EMERGENCY CONDITION

In an emergency condition, the contractor must play an active role in handling the initial emergency condition to prevent greater damage to assets and prevent accidents or fatality in accordance with their capabilities. Steps that can be taken by the contractor include:

12.1. Immediately notify Central Control Room (Ext: 20000). Inform clearly:
- Reporter's identity,
- Location,
- Emergency condition (incident, fire, equipment failure, victims, etc.).

12.2. Contractor performs emergency handling if have ability and safe to do (activate fire alarm, initial fire extinguishing, basic first aid, etc.).
12.3. Contractor ensures their employee immediately go to the nearest assembly point, follow the sign or directive of evacuation officer.
12.4. Contractor ensures that their workers get adequate first aid if any of their workers have a work accident, and help refer them to the hospital if needed.

13. HEALTH, SAFETY AND ENVIRONMENT VIOLATION SANCTION

Sanctions will be given to Contractors who violate the regulation of Safety and Environment Procedure, during normal or emergency working activity in KPJB area. Sanction as follows:

13.1. Direct Warning (1st Warning).
Direct Warning & 1st warning letter is given to Contractor who violates Health, Safety and Environment regulation stated on KPJB Contractor Safety Rules.
13.2. 2nd Warning.
Official 2nd Warning Letter will be issued to Contractor in which during the same contract period, Contractors violate the regulation as stated on KPJB Contractor Safety Rules. Contractors also obliged to replace work supervisor and workers are given sanction and shall be put into blacklist workers/contractors and not allowed to conduct any works in KPJB area for 1 (one) Year.
13.3. 3rd Warning Letter and Black List
Third Warning Letter and Black List will be issued to contractors in which on the same contract period have conducted violation toward these regulations for the 3rd times and reinforced by valid violation evidences, KPJB will give sanction in form of Black List Contractors and not allowed to conduct any work/procurement of Service or Material in KPJB for 1 (one) Year.

14. ATTACHMENT

14.1. KPJB – 0956 – 05 – 10 – FM – 01 Checklist Contractor Document Requirement

PLN

DAFTAR PENERBIT JAMINAN TERSELEKSI
PENGADAAN BARANG/JASA DI LINGKUNGAN PT PLN (PERSERO)

KLASIFIKASI	BATASAN NILAI KONTRAK	PENERBIT JAMINAN	BERLAKU SAMPAI DENGAN
I	TIDAK ADA BATASAN NILAI KONTRAK	PT BANK RAKYAT INDONESIA (PERSERO) Tbk	30 Juni 2025
		PT BANK MANDIRI (PERSERO) Tbk	30 Juni 2025
		PT BANK NEGARA INDONESIA (PERSERO) Tbk	30 Juni 2025
		PT BANK CENTRAL ASIA Tbk	30 Juni 2025
		PT BANK DANAMON INDONESIA Tbk	30 Juni 2025
		PT BANK CIMB NIAGA Tbk	30 Juni 2025
		LEMBAGA PEMBIAYAAN EKSPOR INDONESIA	30 Juni 2025
		PT BANK TABUNGAN NEGARA (PERSERO) Tbk	30 Juni 2025
		BANK OF CHINA (HONGKONG) LTD CABANG JAKARTA	30 Juni 2025
II	NILAI KONTRAK ~ Rp 1 TRILIUN	MUFG BANK LTD	30 Juni 2025
		PT BANK OCBC NISP Tbk	30 Juni 2025
		PT BANK PERMATA Tbk	30 Juni 2025
		PT BANK UOB INDONESIA	30 Juni 2025
		PT BANK KB BUKOPIN Tbk	30 Juni 2025
		PT BANK SYARIAH INDONESIA Tbk	30 Juni 2025
		PT BANK MAYBANK INDONESIA Tbk	30 Juni 2025
		PT BPD JAWA TIMUR Tbk	30 Juni 2025
		PT BANK BTPN Tbk	30 Juni 2025
III	NILAI KONTRAK ~ Rp 150 MILIAR	PT BANK MIZUHO INDONESIA	30 Juni 2025
		PT BANK ICBC INDONESIA	30 Juni 2025

Jakarta , 6 Februari 2025
PT PLN (PERSERO)
DIREKTUR KEUANGAN

SINTHYA ROESLY

Jl. Trunojoyo Blok M-I/135 Kebayoran Baru Jakarta 12160
T (021) 7261875, 7261122, 7262234, 7251234, 7250550
F (021) 7221330, 7397150 **W** www.pln.co.id

Paraf _____

BANK GUARANTEE
BID BOND UNDER SE BI
_____[number]
_____[places & dated]

To :

PT. Perusahaan Listrik Negara (Persero) UIK Tanjung Jati B
Desa Tubanan, Kecamatan Kembang, Kabupaten Jepara
Jawa Tengah, 59457

*Whereas PT Bank_____[name of bank] domiciled in and having its address at_____[address] (hereinafter referred to as the **"Bank")**, hereby irrevocably guarantee _____[name of applicant] having a registered address at _____ [address] (hereinafter refer as the **"Principal")** for the favour of PT. Perusahaan Listrik Negara (Persero) UIK Tanjung Jati B having a registered office at _____ (hereinafter refer as the **"Beneficiary**" to make a payment of amount up to_____(say:_____) if the Principal has failed and/or neglected to perform its obligation, including if Principal does not follow the procurement process and/or does not sign/enter into contracts/agreements or fulfill other provisions as specified in the Bid Document_____no_____date _____ [Bid Document] ("**Bid Document**") for the Project of _____ [name of Project], including but not limited to the Principal failure to maintain the validity period of this Bank Guarantee in accordance with the Bid Document and/or request of the Beneficiary.*

This Bank Guarantee is issued with the following provisions:

1. *This Bank Guarantee shall be effective on and as of the date of _____ until_____[maturity date].*
2. *The payment of Bank Guarantee shall be made without require Principal approval upon our receipt of Beneficiary's first written demand*

BANK GARANSI
JAMINAN PENAWARAN BERDASARKAN SE BI

_____(Nomor)
_____(Tempat & Tanggal)

Kepada :

PT. Perusahaan Listrik Negara (Persero) UIK Tanjung Jati B
Desa Tubanan, Kecamatan Kembang, Kabupaten Jepara
Jawa Tengah, 59457

PT Bank_____*[nama bank]* berkedudukan di_____*[alamat]*, (untuk selanjutnya disebut **"Bank"**), dengan ini menjamin tanpa dapat ditarik kembali_____[nama badan usaha penyedia barang/jasa] beralamat di _____ (untuk selanjutnya disebut **"Terjamin"**) terhadap PT. Perusahaan Listrik Negara (Persero) UIK Tanjung Jati B beralamat di _____(untuk selanjutnya disebut sebagai **"Penerima Jaminan"**), untuk membayar sejumlah uang sebesar_____(terbilang: _____) apabila Terjamin melakukan tindakan dan/atau gagal untuk melakukan tindakan termasuk apabila Terjamin tidak mengikuti proses pengadaan dan/atau tidak menandatangani/memasuki kontrak/perjanjian atau memenuhi ketentuan lainnya sebagaimana ditentukan dalam Dokumen Pengadaan _____no_____tanggal _____ [Dokumen Pengadaan] ("**Dokumen Pengadaan**") untuk_____[nama proyek], termasuk namun tidak terbatas pada kegagalan Terjamin untuk memelihara masa berlaku Bank Garansi ini sesuai Dokumen Pengadaan dan/atau permintaan Penerima Jaminan.

Bank Garansi ini dikeluarkan dengan ketentuan-ketentuan sebagai berikut:

1. Bank Garansi ini berlaku efektif sejak tanggal_____dan akan berakhir pada tanggal_____[tanggal jatuh tempo].
2. Pembayaran atas Bank Garansi ini dilakukan tanpa perlu mendapat persetujuan Terjamin setelah adanya

stating that the Principal has failed to fulfill its obligation under the Contract and the amount to be paid to Beneficiary by attaching of the original of this Bank Guarantee.

3. *The deadline for submission and receipt of any claim on this Bank Guarantee by Beneficiary to the Bank shall be made in writing, not later than 30 (thirty) calendar days from the date of maturity of this Bank Guarantee, provided that if the date falls on holiday or a day on which banking institutions are permitted to be closed, then the submission shall be made no later than one working day thereafter.*
4. *The Bank shall be firmly bound unto the Beneficiary for the Payment in the amount as mention above not later than 15 (fifteen) calendar days after receipt of Beneficiary's first written demand and the original of Bank Guarantee to the Bank.*
5. *With reference to Article 1832 of Indonesian Civil Code (Kitab Undang-Undang Hukum Perdata), the Bank hereby relinquish/waives its privileges/rights granted by law to claim/demand on asset belonging to the Principal and/or bound as collateral be confiscated, seized or sold in advance for the discharge of Principal debts as stipulated under Article 1831 of Indonesian Civil Code.*
6. *The payment of Bank Guarantee claims/demands is absolute and unconditional even though there is a demand, request or objection from the principal or any other party whatsoever.*
7. *The payment of bank Guarantee claims/demand will be made to the account designated by the Beneficiary, free and clear of, without any reduction for any reason, either present or future, of all taxes, levies, fees or withholding whatsoever, imposed or collected with respect thereto.*

surat permintaan pencairan Bank Garansi dari Penerima Jaminan kepada Bank yang menyatakan bahwa Terjamin wanprestasi/gagal memenuhi kewajibannya berdasarkan Kontrak dan jumlah yang harus dibayarkan kepada Penerima Jaminan beserta asli Bank Garansi ini.

3. Batas waktu pengajuan dan penerimaan tuntutan penagihan/klaim atas Bank Garansi ini adalah selambat-lambatnya 30 (tiga puluh) hari kalender sejak tanggal jatuh tempo Bank Garansi ini, dengan ketentuan apabila tanggal tersebut jatuh pada hari libur atau diluar hari kerja Bank, maka pengajuan akan dilakukan selambat-lambatnya pada satu hari kerja Bank setelahnya.
4. Bank akan membayar kepada Penerima Jaminan untuk jumlah tersebut di atas seketika selambat-lambatnya 15 (lima belas) hari kalender setelah diterimanya surat permintaan pencairan Bank Garansi dan Asli Bank Garansi dari Penerima Jaminan kepada Bank.
5. Dengan mengacu pada Pasal 1832 Kitab Undang-Undang Hukum Perdata, Bank dengan ini melepaskan hak-hak istimewanya yang diberikan oleh undang-undang sebagaimana dimaksud dalam Pasal 1831 Kitab Undang-Undang Hukum Perdata untuk menuntut supaya benda-benda milik Terjamin dan/atau yang diikat sebagai jaminan lebih dahulu disita dan dijual untuk melunasi hutang Terjamin.
6. Pembayaran atas klaim/tuntutan pencairan adalah mutlak dan tanpa syarat *(unconditional)* meskipun ada tuntutan, permintaan atau keberatan dari Terjamin atau pihak manapun.
7. Pembayaran atas klaim/tuntutan pencairan Bank Garansi akan dilakukan ke rekening

8. *This Bank Guarantee is non-transferable and/or cannot be pledged to another party*
9. *This Bank guarantee can't be amended, modified or supplement unless such amendment, modification or supplemented has been approved by Beneficiary in written or as expressly required by Beneficiary to Applicant.*
10. *This Bank Guarantee shall be governed by and construed in accordance with laws and regulations applicable in Indonesia.*
11. *For the purpose of this Bank Guarantee issuance and any consequence thereof, Bank chooses the Court of _____ [domicile of court] as general and permanent domicile.*
12. *This Bank Guarantee has been executed in both Bahasa Indonesia and English. The two versions of this Bank Guarantee shall not be construed as separate documents and, when taken together, shall constitute one and the same instrument. In the event of any conflict or inconsistency between the English language version and the Bahasa Indonesia language version of Bank Guarantee.*

bank yang ditunjuk oleh Penerima Jaminan, bebas dan bersih serta tanpa pengurangan dengan alasan apapun, baik yang berlaku pada saat ini atau kemudian, dari semua pajak, pungutan, biaya atau pemotongan apapun, yang dibebankan atau dipotong sehubungan dengan hal-hal tersebut.

8. Bank Garansi ini tidak dapat dipindahtangankan dan/atau dijaminkan kepada pihak lain *(non-transferable).*
9. Bank Garansi ini tidak dapat diubah kecuali perubahan tersebut disetujui oleh Penerima Jaminan melalui surat tertulis atau secara tegas dimintakan oleh Penerima Jaminan kepada Terjamin.
10. Bank Garansi ini diatur oleh dan ditafsirkan berdasarkan peraturan perundang-undangan yang berlaku di Indonesia.
11. Untuk tujuan Bank Garansi ini dengan segala akibat hukumnya, Bank memilih domisili yang tetap di Kantor Panitera Pengadilan Negeri di _____ [domisili pengadilan].
12. Bank Garansi ini dibuat dalam Bahasa Indonesia dan Bahasa Inggris. Dua versi dari Bank Garansi ini tidak dapat ditafsirkan sebagai dokumen terpisah, dan ketika ditandatangani bersama, harus dianggap satu dan merupakan instrumen yang sama. Dalam hal terdapat konflik atau ketidaksesuaian antara versi Bahasa Inggris dan versi Bahasa Indonesia atas Bank Garansi ini, maka versi Bahasa Indonesia akan berlaku.

This Bank Guarantee is issued by duly authorized officers on the date _____ and to be used by properly interested party

Demikian Bank Garansi ini di terbitkan oleh yang berwenang pada tanggal _____ untuk dapat dipergunakan sebagaimana mestinya dan oleh yang berkepentingan.

_____[places/tempat],_____[*dated*/tanggal]

PT_____[*name of bank*/nama bank]

[*Bank Stamp*/Cap Bank]

_____[*authorized signatory*/tandatangan pejabat yang berwenang]

DOCUMENT PROCUREMENT
RFQ NO. K19213 R01

URGENT

NAMA PERUSAHAAN :

ALAMAT / TELP. :

SUBJECT / NO. RFQ :

WAKTU CLOSE BID : (Kamis, 17 Juli 2025) Jam 11.00 WIB

To : **Ulfa Nikmatul Lutfiana**
PT. Komipo Pembangkitan Jawa Bali (KPJB)
PLTU Tanjung Jati B Unit 3 & 4
Ds Tubanan, Kec Kembang,
Kab Jepara, 59475 Jawa Tengah
Telp : 0291-4270493